TEXAIR

Textile Based Ventilation

Textile Based Ventilation
PDF edition, Dec. 2022

Published by: 118, 157, Kr. Valdemara street, Riga, Latvia

phone +371 67 270 580 (Office)
website www.texair.eu
email order@texair.eu

TEXAIR
Textile Based Ventilation

CONTENTS

About TEXAIR

The Latvian TEXAIR Company specializes in the production of air distribution textile systems (textile ventilations) for all types of air heating, ventilation, and conditioning (HVAC).

The use of cutting-edge production technology combined with our extensive experience operating in the HVAC sphere (Heating, Ventilation, and Air Conditioning) has provided us a means to manufacture high-quality products. We also are constantly striving to improve our textile duct systems and integrate ever newer front-running technical solutions into our manufacturing process.

With a laboratory equipped with high-precision control equipment at our disposal, we are studying the distribution of air flow under various conditions and modes of air distributor operation.

Meanwhile, particular characteristics of materials are taken into account, such as air flow placement, means of air distribution, air flow remoteness, temperature difference, and other parameters. Based on the calculations, we've obtained, we design the optimal air duct system for the customer that will allow us to achieve the air exchange system that the facilities require. As a result of these air socks, TEXAIR achieves a unified air distribution system.

Having our own engineer-technician base, high-tech production, modern equipment, and laser machines provides us the basis to offer European-quality products at a lower price.

TEXAIR WORLDWIDE

YouTube TEXAIR

scan a QR code on your phone or click on image

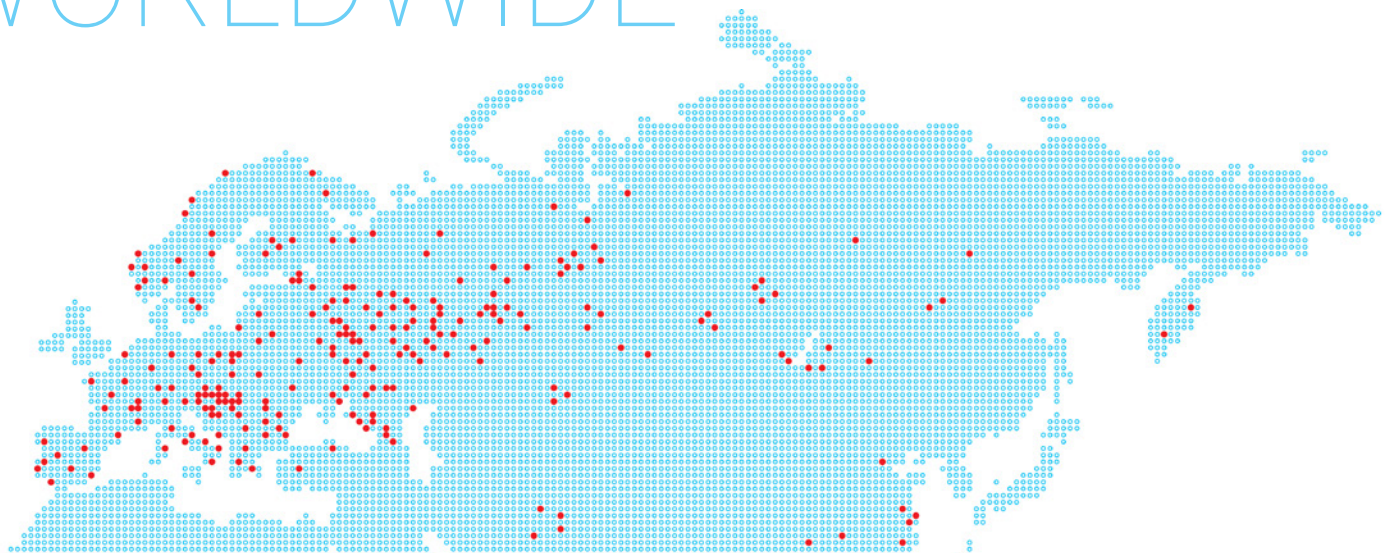

Application

FOOD INDUSTRY

In the food industry, the primary requirements stated for the ventilation system fall under sanitary and hygienic requirements. For this reason, the ventilation systems must be easy to clean. The air socks satisfy this requirement with ease, since they can be cleaned in washing machines. The use of antibacterial fabrics helps avoid the spread of germs on the walls of the ducts.

SPORT FACILITIES

A particular feature of ventilation in sports facilities is that such halls are often used for sessions of intense workouts which may be categorized as heavy-duty physical exertion. This, in turn, calls for a particular approach to the ventilation systems' design. Air socks allow for the necessary mobility in the air that is desirable in facilities used for health and exercise as well as an even distribution of air all around the sports hall, ensuring that any no flow areas are missed.

WAREHOUSES

Warehouses are usually distinguished from other facilities by their large areas and high ceilings. Air heating is currently one of the most efficient solutions for such a type of facility. Meanwhile, nothing can achieve this objective better than air ducts. They allow for air to travel at the necessary speed throughout the work area in spite of the great height at which they are installed. Even air distribution ensures a constant temperature, which is a necessary condition for storing various types of products.

THE GREENHOUSE BUSINESS

Today, the development of the greenhouse business is undergoing a new growth phase. This is not only facilitating constant demand for fresh fruits and vegetables, but also the advent of new technology for the construction of similar facilities and solutions for creating a microclimate in greenhouse facilities. One such novelty is the use of air socks in air heating systems for greenhouses. Ducts are usually stored in the lower section of greenhouses in order to ensure that as much heat as possible is transferred to the plants. Air socks can also be used for an even supply of carbon dioxide to feed the crops.

Application

OFFICE FACILITIES

Air socks, unlike metallic ducts, feature a much greater variety of color and shape, which allows them to be used in office facilities where requirements for their appearance are often of the utmost importance. The nature of air ducts' material allows for various images to be printed on them. With the use of TEXAIR's air ducts, even the ventilation system may feature the corporate color and the customer's company logo.

MALLS

One of the main requirements stated in regards to malls are the high fire-safety requirements they have. For this purpose, TEXAIR Company offers materials made from a material resistant to burning. The ducts may be manufactured out of different colors of materials, which is an unmistakable advantage they present over traditional systems. Meanwhile, the ability to distribute air all throughout zones will come in handy at such venues, for instance, as grocery cooling sections.

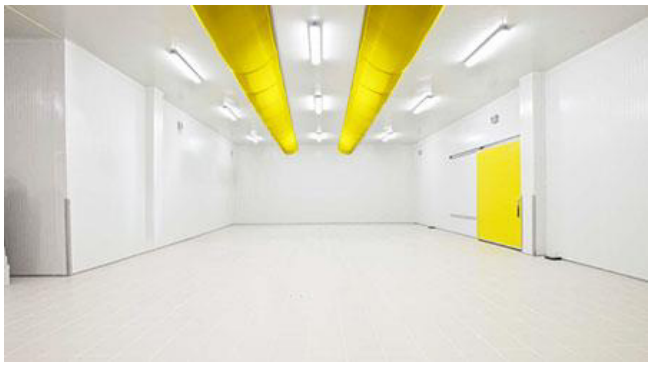

COOLER ROOMS

The cooling of products at food production sites is a crucial part of the production process. Most commonly, products are cooled following pre-packaging or heat processing. As a rule, cooler rooms used for storing food products are compact, but are filled up will a large amount of products, so in order to ensure that the cold air is distributed evenly throughout the cooler room, companies often choose to use air ducts. This solution helps ensure even cooling or freezing for products, no matter how far away they are set from the air cooler.

PRODUCTION

TEXAIR fabric ducts are also used at various industrial production sites, each of which entailing its own unique characteristics. There are large heat flows present at many companies, related to technological processes. The use of air socks allows for additional air flows to be directed into these zones to compensate for the heat flows; meanwhile, the TEXAIR-S unified tool helps calculate them precisely.

FLOWER STORAGE

Anyone who is running a flower business has the necessity to store his or her flowers, which means that he or she will need a cooler room. It provides flowers the ability to reside under the conditions that are most comfortable for them to survive. However, simply their storage alone in a cooler room does not ensure that they will remain well-preserved, since a strong flow of cool air may cause the plants to become overdried. Air socks help to distribute cool air flow equally and at a low speed throughout the room, which ensures as comfortable conditions as possible for flower storage and helps them retain their appearance for a long time.

ICE ARENAS

Ice arenas are the areas where a lot of people spend some nervous moments, being as a sportsman or public. So they needs to have enough quality air for feeling good. From the different points of view, textile air socks are the best solution for this purpose.

Air Ducts

Air socks' (textile air ducts) use in the world began quite a long time ago. One of the first mentions of it was the integration of an air distribution textile system in 1973 at a slaughterhouse in Denmark. This technology provides a means to replace the traditional metallic ducts for textile counterparts with varying cross sections. TEXAIR Company produces air socks for the worldwide market since 2015.

PRIMARY FEATURES OF TEXAIR AIR DUCTS

Facility ventilation: no draft even under conditions of very high air exchange intensity (air is distributed through air permeable or microperforated fabric).

High level of intermixture: of the supplied air with the air located in the facility (as air is distributed through an enormous amount of small holes).

Washable: in an ordinary industrial washing machine for maintaining the necessary cleanliness (may also be decontaminated).

No duct corrosion: due to the chemical resistance of the materials used against most bonds present in the air.

No risk of condensate formation: on the surface of the air distribution system (with the use of air permeable fabric).

Light-weight: of the system thanks to the light weight of the textile sleeve as well as the intricate manufactured elements made from the same material.

Quick installation: and dismantlement. Thanks to a system of light attachments snapped onto a cable or inserted into a groove of the installation section.

No noise during: operation due to a property of the textile materials that they do not transfer sound waves well.

Original appearance: the ability to select an appropriate color (company style).

Low cost: the total combined cost of the ducts, installation expenses, shipping expenses, and finishing works turn out about 1.5 to 3 times cheaper.

THE USE OF AIR DUCTS IN THE PUBLIC AND INDUSTRIAL SPHERES

Two trends may be discerned regarding the use of air socks (fabric air ducts): industrial and public.

The benefit of their use in the industrial sector is that the even distribution of air and maintenance of the necessary temperature marks an unmistakable advantage that air socks have over other systems.

In all industrial facilities, whether textile, chemical, or food facilities, a great number of facilities exist which are rather difficult to scheme for with the large amount of production pipes, cables, and other elements that impede the installation of metallic (traditional) ducts. That is where air socks come in handy with their light weight, which allows them to be snapped in at any location without overburdening the construction.

In accordance with the particular aspects characteristic of the food industry, all equipment used in operation must ensure that the food products are preserved and correspond to needs for easy and efficient cleaning. The air socks fully satisfy this need considering that they may be cleaned in a washing machine without impeding the factory's operating processes using the necessary disinfection remedies.

In the public sector, air ducts can provide air distribution in accordance with the specific conditions needed for particular zones. This type of air distribution is considered lower cost, since air ducts function simultaneously both as ducts and diffusers. Fabric ducts are offered with the choice of a broad color range, so they enjoy great demand in such public facilities as cafes, restaurants, supermarkets, public pools, and fitness clubs.

It is also worth noting that air ducts are easily installed means of air conditioning, ventilation, or air heating systems, which allows them to be used at exhibitions and other temporary events.

AIR SOCKS LIFETIME

Air socks, just as any other product, have a service life. For each time of fabric, the producers establish a different service life which, depending on the environment it's used in, will range between 5 and 15 years.

SERVICING

In the standard solution, air ducts may be cleaned in an ordinary washing machine; meanwhile, depending on the type of fabric, drying them will take no more than 3-4 hours. TEXAIR Company can offer an entire servicing program for customers from 1 to 10 years long. As you can see, servicing the air ducts isn't difficult to do.

AIR PERMEABLE FABRIC

TEXAIR's system of round and semi-circular ducts are made of air permeable fabric, perfect for climate control systems used for cooling. A distinguishing characteristic of TEXAIR's air permeable fabric is the constant air permeability value of its fabric under a certain pressure. The air permeability of the fabrics allows the air to be distributed at a low temperature without the risk of condensation formation. TEXAIR's ducts are equally efficient with the use of large and small volumes of supplied air – air distribution is accounted for individually in each facility. Depending on the required climatic conditions, TEXAIR experts select one of eight types of fabric for the customer's particular objectives.

AIR NON PERMEABLE FABRIC

TEXAIR's ducts are produced out of air-impermeable fabrics as well. The air supply occurs through calibrated perforation along the entire duct, which allows it to be used both in ordinary and very high facilities.

The scheme programs developed by TEXAIR engineers allows for the necessary perforation angle, size, and number of holes to be calculated for each duct segment. This allows for precise air distribution to be achieved in facilities. Depending on what one's needs are, one can use materials with various additional characteristics – augmented durability, fireproofness, chemical resistance, etc. These air socks are supplied with in a broad color range as well.

TEXAIR's system of round and semi-circular ducts are made of air permeable fabric, perfect for climate control systems used for cooling. A distinguishing characteristic of TEXAIR's air permeable fabric is the constant air permeability value of its fabric under a certain pressure. The air permeability of the fabrics allows the air to be distributed at a low temperature without the risk of condensation formation. TEXAIR's ducts are equally efficient with the use of large and small volumes of supplied air – air distribution is accounted for individually in each facility. Depending on the required climatic conditions, TEXAIR experts select one of eight types of fabric for the customer's particular objectives.

Primary Advantages

CHEMICAL AND CORROSION RESISTANT

In the manufacture of its air socks, TEXAIR uses materials that are chemically resistant and non-reactive to the majority of components floating around in the air. Meanwhile, for use in aggressive environments or at enterprises whose equipment calls for high requirements in the materials, TEXAIR uses special fabrics. For instance, material made of out of 100% polyester with no admixtures or additives exhibits sufficient resistance to such substances as synthetic hydrochloric acid, chemically pure sulfuric acid, and ammonium chloride , which allows it to be used for ventilation systems in facilities for microcircuitry production. The features of our products also allow material to be manufactured for ducts or a special coating to be applied on them with a particular combination of properties. In this way, companies may receive a customized material that best handles the aggressive environment that they operate under. This offers the customer a system of specially tailored ducts for each unique type of facility without having to depend on the standard solutions that the market imposes.

ANTIBACTERIAL PROPERTIES

The antibacterial effect was achieved by way of adding special properties to the fabric by including special threads within the material (bacteriostatic or antibacterial). The content of threads with antibacterial properties is somewhere between 5 and 99% of the entire volume of the fabric and may feature such components as triclosan, pure silver or silver ions, silver zeolites (silver with a non-organic ceramic base), copper oxides, and non-organic bonds of silver and zinc. The use of such materials provides a means to extend the life cycle of the fabric diffuser during intervals between operations.

LOW-COST

TEXAIR air ducts provide for efficient distribution of air without any additional, expensive distribution devices. Furthermore, such ducts allow customers to cut back on their budget substantially thanks to the simplicity of installation as well as the lower cost of the materials and components compared to the zinc-coated ducts. When folded up and packaged their overall dimensions are far less, resulting in lower logistics expenses. Textile air ducts do not require many elements that traditionally systems call for, in particular: air distribution elements (diffusers, anemostats, grids, etc.), mufflers, numerous attachments and connecting parts, and fixtures.

ENVIRONMENT-FRIENDLY

The ducts feature a smooth inner surface designed to minimize losses due to air friction against the wall, which impedes the deposit of contaminations during use. The materials used in production feature a hygiene certificate, are tested, and have been approved; they do not cause any allergic reactions and are thus completely safe and suitable for use in various facilities. This allows air socks' use to continue to expand in such fields where previously metallic ducts were used by default.

FLEXIBLE INSTALLATION

TEXAIR presents a wide selection of various standard sizes and geometrical shapes of ducts. For instance, for facilities with low ceilings we recommend using semi-circular-shaped ducts; meanwhile, for ceilings on which no systems can possibly be placed, we recommend them in the form of a segment or a sector. Such a variety offers the chance to select the most convenient, lowest-cost shape option and duct placement, regardless of the particular features of the facility.

MAY BE USED WITHIN A BROAD TEMPERATURE RANGE: -50...+380°C

TEXAIR Company has materials at its disposal with a broad range of consumer properties. Since the conditions under which the fabric ducts may be used vary greatly, each type of fabric used features its own temperature range. This allows customers to choose the most suitable solution for their facility, rather than overpaying for a universal option.

LIGHT-WEIGHT

Air ducts are quite a bit lighter-weight than metallic ducts. The maximum thickness of the material is about 600 g/m², so the average weight of a linear meter of a duct usually is less than a kilogram. This allows them to be snapped onto self-supported constructions in which the use of traditional systems would be out of the question. Thus, the use of fabric air ducts offers a means to provide a full-fledged ventilation system in such facilities without in any way restricting the customer.

ENVIRONMENT-FRIENDLY

The ducts feature a smooth inner surface designed to minimize losses due to air friction against the wall, which impedes the deposit of contaminations during use. The materials used in production feature a hygiene certificate, are tested, and have been approved; they do not cause any allergic reactions and are thus completely safe and suitable for use in various facilities. This allows air socks' use to continue to expand in such fields where previously metallic ducts were used by default.

LOW-COST

TEXAIR air ducts provide for efficient distribution of air without any additional, expensive distribution devices. Furthermore, such ducts allow customers to cut back on their budget substantially thanks to the simplicity of installation as well as the lower cost of the materials and components compared to the zinc-coated ducts. When folded up and packaged their overall dimensions are far less, resulting in lower logistics expenses. Textile air ducts do not require many elements that traditionally systems call for, in particular: air distribution elements (diffusers, anemostats, grids, etc.), mufflers, numerous attachments and connecting parts, and fixtures.

CONVENIENT ASSEMBLY, DISASSEMBLY AND EASE OF INSTALLATION

One of the main advantages with textile air socks is their ease of assembly. In this regard, customers can save as much as up to 90% in expenses compared to dealing with traditional metallic systems. And keeping in mind that any ventilation system must be services and periodically cleaned, the ease of its disassembly and subsequent installation gives fabric ducts an unmistakable advantage over its zinc-coated counterparts.

EASY-TO-REPAIR

Any segment in TEXAIR ducts can be easily replaced. This is thanks to its simple zipper fastening connection mechanism. If suddenly for any reason one has the need to switch a segment of the duct, this can be easily done by the customer on his or her one without having to call in a representative of an installation organization.

COMPATIBLE

The ducts are easily connected with metallic ducts into a unified, combined system. For assembly onto the supply line, a connecting component is provided for on the duct which can be used to connect a textile system to the end of any shape or configuration.

BALANCE

The ducts do not require any additional measures to return a balance as a result of the air flow. The customer is delivered a fully prepared, balanced system in terms of the air distribution system's air flow and pressure. For this reason, the customer will no longer have the need to subsequently readapt the system following installation.

HYGIENE

The air socks can be operated with faster air speeds than metallic ducts and feature a smooth inner surface. For this reason, the TEXAIR ducts do not accumulate a dust layer in the course of their operation. The entire system, including all its passages and turns, are manufactured out of fabric, so it can undergo cleaning and washing with no restriction in a washing machine. As a result, the amount customers will be able to save on subsequent servicing is also an unmistakable advantage that fabric ducts have.

LONG-TERM SERVICE: 10 YEARS OR MORE

The fabric ducts are produced out of certified materials characterized by a high level of durability and wear-resistance. The ducts can handle a large number of washing cycles in a washing machine. If the rules of use are properly observed, the service life of the air socks will exceed 10 years. Meanwhile, considering the fact that people clean traditional systems, due to the expenses, as seldom as possible, air socks are the most preferable option from an operation perspective as well.

Air Distribution

Air socks are used both for air distribution and transportation with nearly identical efficiency.

• through permeable fabric;

• through microperforation – holes less than 1 mm in diameter;

• through perforation – holes over 1 mm in diameter;

• through an exit adapter: air exits in a direction perpendicular to the flow's direction – through an open end – the air is supplied into another fabric duct.

• Perforated ceiling panels (diffusers)

Various methods exist for air distribution in textile systems.

Microperforation provides a means to supply and disperse air at a small distance away from the duct's surface while perforation, of a larger diameter, offers the ability to provide air emission a greater distance away and in a particular direction. If there is a need, one can combine dispersed and directional air emission.

The vast majority of ventilation systems works with a small excess pressure somewhere between 70 and 300 Pa. However, the parameters of facilities, in particular the distance from the ducts to the work area, may differ greatly. Air distribution conditions also differ, for instance, for air conditioning, heating, or ventilation. Correspondingly, this could involve emitting cooled air in a facility with a low ceiling, meanwhile, warm air in a facility with a high ceiling must be emitted differently. Since when air distribution of the same principle is used in these two cases, the speed of the air in the work area will differ greatly.

Depending on where the textile ducts are used and for what purposes, TEXAIR uses different air distribution systems for its projects.

LOW-SPEED AIR DISTRIBUTION SYSTEM

The primary feature of these systems is the emission of air with a relatively low-range stream distance. The air is emitted through micro holes created by a laser on the surface of the fabric. Meanwhile, both air permeable material and air impermeable material can be used. The outflow of air through each individual micro hole is very little, so the air loses its speed very quickly as it exits.

The result of this is that there is practically no draft, which is especially important while the cool air is being supplied. In the event that such air distributors are placed on the ceiling, the cold air will slowly descend.

However, should one choose such a system of air distribution, one should keep in mind that due to the short range of microperforation, there will be a relatively low degree of mixing in the air. There are also restrictions in the air's emission for each line meter in such ducts, so, often times, when the dimensions of a cooler room are particularly large, or when the company needs to emit a significant amount of cold air, they rather choose a combination of microperforation and additional perforation with a certain specially calculated diameter of holes. The slow speed of the flow of air conditioning in the work zone is one of the main conditions not only for people to comfortably reside in the room, but also for many technological processes. These may be the processes of cheese ripening, cutting and packing sausages and meat products, prepackaging fruits and berries, and much more. In such facilities air socks play not only a ventilation role but can also be a crucial part of the technological process.

As an example of the efficiency of such air ducts, one can take a look at a sausage ripening factory. Sausage is stored suspended in a room with a particular temperature and humidity. Meanwhile, along with fermentation, a process takes place in which the moisture is extracted from the product, so in the event of an improperly calculated supply system, the air can blow against the product with a higher speed and the moisture removal process may take place quicker than needed. Even if these losses amount to a mere several excess grams per kilogram of the finished product, in the event that the factory has a volume of dozens of tons, this could entail substantial financial losses for the producer.

HIGH-SPEED AIR DISTRIBUTION SYSTEM

For high-speed systems, the recommended height of ducts' suspension above the floor level ranges from 3 to 10 meters. Such air ducts are most efficient when used for ventilation and air heating.

This system is distinguished by the much greater range of its air stream compared to the low-speed system.

The physics of the air distribution process itself also differs. Due to the excess pressure inside the fabric air duct, the air exits the holes at a high speed, the diameter of which varies from 4 to 12 mm.

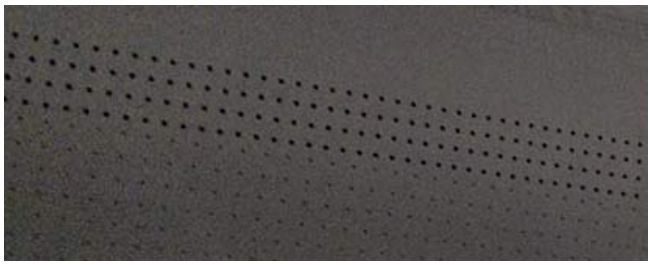

The high speed at which the air exits the holes and the significant volume allows the air flow to reach the work area located at a significant distance away from the textile air duct. The way this system operates is similar to the operation of an injector in a modern combustion engine. With the help of the injector, a well-blended mixture of air and gasoline steam is fed into the engine. In a similar way, the movement of the air stream takes place from the holes of the duct in a high-speed system. This injection principle provides for the high-quality mixture of the air located in facility. Meanwhile, the friction of the layers and the whirling of the air flow renders the heat (cold) emission process more efficient than in traditional systems with grids and diffusers.

One could provide as an example an air heating system for a finished product warehouse implemented using air socks. At the project's implementation stage, the customer encountered difficulty with the use of metallic ducts, since the construction that they needed to attach them to was self-supported. It couldn't handle the weight of the metallic ducts and it would be financially very expensive to attach them onto additional columns. Yet another condition was the location of the ducts which were 7 meters above the floor in order to avoid impeding the movement of the loading equipment. In order to tackle this task, air socks were used which, due to their light weight, were attached right onto the roofing construction. The resulting implemented high-speed air heating system also came with significant financial implications for the customer...

HYBRID TYPE AIR DISTRIBUTION

The hybrid type air distribution system combined low-speed and high-speed types. Its use is worthwhile in cases where the objective is to distribute air in a facility into different work areas at once, located at varying distances from the duct emitting the air. Meanwhile, the speed in these work areas will not exceed the required values. To ensure this, a calculation of the air distribution is computed for each zone separately, taking into account the distance of each work zone from the emitted air, the required air speed in each zone, the static pressure figure in the channel, as well as the temperature data.

Such types air distribution find use in facilities with a large amount of equipment and zones for servicing where people work as well as in facilities where it is technically impossible to divide supplied ventilation according to different zones.

TRANSIT SYSTEM

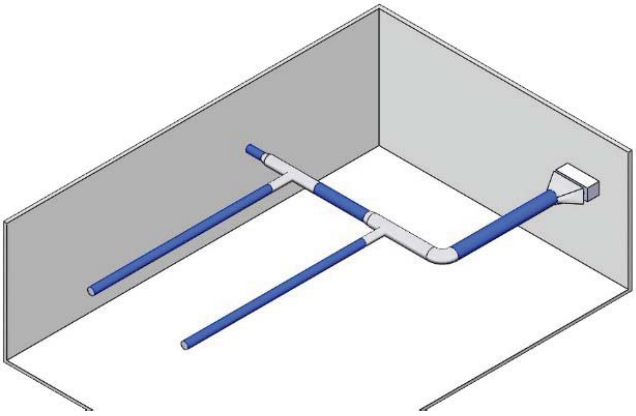

TexAir socks are used both for air distribution and transportation with nearly identical efficiency. When they are used as a transition system, they are made out of material with low air permeability in order to avoid the formation of condensation. To combine it with metallic ducts, various shapes of elements will be used, which are also manufactured out of fabric.

In the drawing transition elements are shown in bright grey while the emission elements are in blue.

If a significant amount of fresh air is not required in the facility according to the air exchange calculation, but at the same time it occupies large areas that are not being used for a productive amount of work, then equal air emission across its entire volume may not be well-advised. In such cases, air socks are used with the ability for local air emission along with transition sections. This is especially crucial in office facilities without borders where workspaces alternate with hallways. TEXAIR air ducts can be designed in such a way as to ensure the most comfortable possible conditions for employees and implement them in one of the office facilities. If the flow of air is constant along the entire length of the fabric air ducts, then in order to ensure comfortable conditions for the employees, one has to go with the a more powerful and expensive setup; however, in the case of local air emission, there is no need. One can do without the former and adopt a much more low-cost solution.

Calculation and Design

PRIMARY FACTORS TAKEN INTO ACCOUNT WHEN DESIGNING AIR SOCKS

For air sock calculation, we use the TEXAIR-S unified tool. Since each air sock distribution system is calculated for each immediate, specific facility, technological objective, and the parameters of the studied equipment, at the design stage we take the following factors into account: the temperature of the air supplied, the temperature of the air in the facility, the excess pressure, the speed of the air in the duct, the distance to the work area, the facility's configuration, and other components. Using TEXAIR-S, the engineers calculate the optimal air duct diameter and the optimal diameter for the perforated holes as well as the quantity of them and the duct's placement relative to the axes and the suspension details. This provides a basis for the relative air velocity in the work zone.

The TEXAIR-S unified software tool provides a means to model the air distribution system, taking its purpose into account. In the event of air heating and conditioning, the movement of the air flows is different, so we have to take into account all of the thermodynamic parameters in order to avoid layering (stratification) and air dead zones at various elevations in the facility.

At certain facilities, due to the technological processes, local zoning of air flows is required; meanwhile, often times augmented air volumes must be emitted while observing the air velocity requirements in the work zone. The TEXAIR-S unified software tool provides a means to compute the corresponding calculations and correctly choose the corresponding emission components for the system.

Graphic No. 1. Distribution of heat energy with continuous air flow

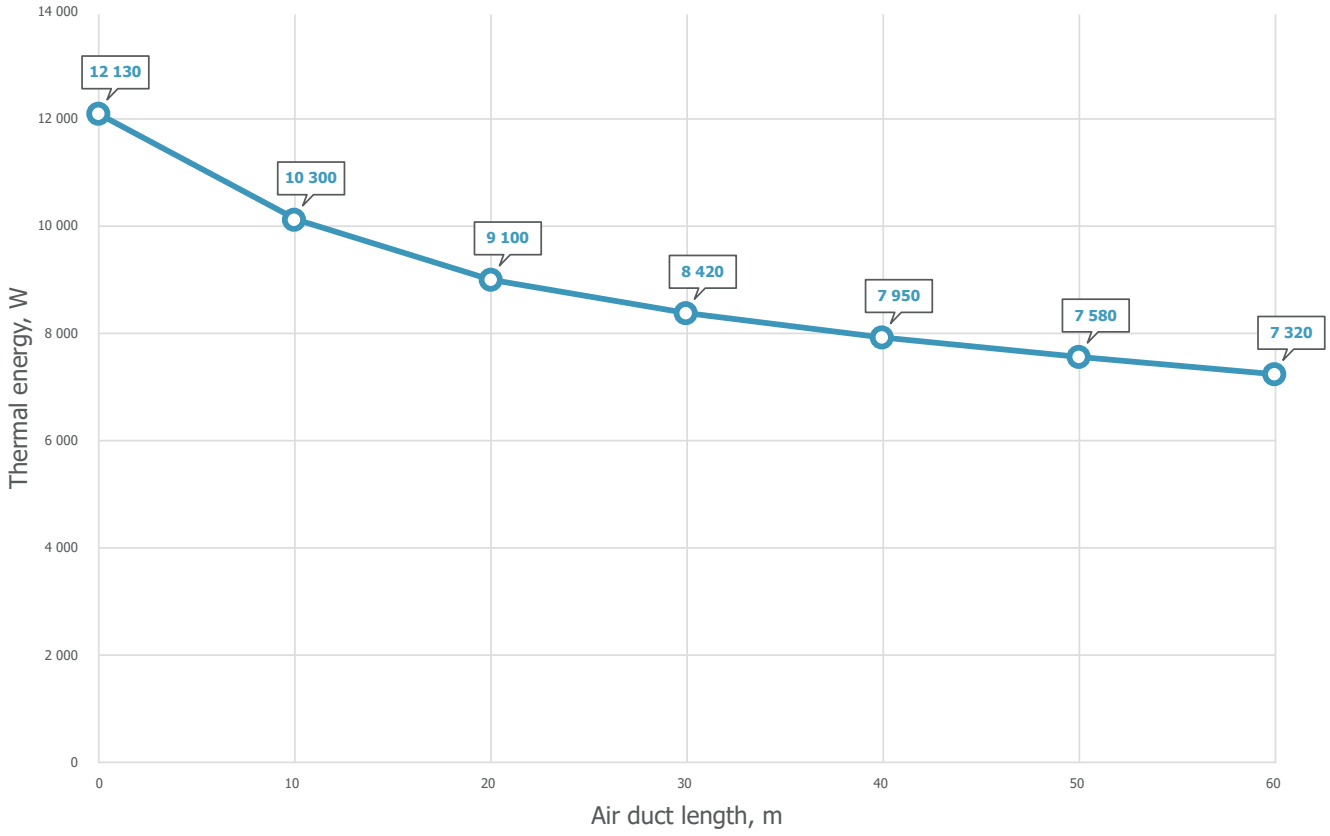

PRESSURE

Lying at the foundation of the textile air distribution's operation principle is the principle of continuous static pressure. Thanks to that, we could achieve even air distribution along the entire length of the system.

Because the air speed reduces inside toward the end of the duct, a resulting increase in static pressure is thus observed. It is for this specific reason that we take this size into account during the design phase in order to ensure equal distribution of area along the entire length of the line.

The recommended static figure recommended by TEXAIR experts is between 60 and 500 Pa. However, since the aspiration systems operate at a much greater pressure level, we calculate such projects as well.

EMISSION OF HEAT ENERGY THROUGH AIR SOCKS

The main requirement stated for air socks is a continuous, even air flow throughout the entire length of the line. And TEXAIR air ducts handle this objective miraculously.

However, if the line is significantly long, the air passing along the fabric duct may lose heat energy due to heat losses caused by a difference in temperature of the air being supplied and the air located in the facility. Thus, the air temperature in the textile air duct will differ from the temperature at the end segment.

This can be seen in Graphic No. 1, which exhibits a 60-meter duct consisting of 6 segments equal in length.

In order to ensure event distribution of the heat energy, the air flow must be augmented in proportion to the heat losses along the entire length of the duct, which is shown in Graphic No. 2.

If the length of the line is not great or it features a complex configuration, then zonal air distribution will be the best option for optimal cooling or heating.

SELECTING THE AIR DUCT DIAMETER

The fabric air duct diameter is chosen based on two primary parameters: the air flow and the required current velocity within the duct. This speed is usually regulated by the SNiP construction rules and regulations for metallic ducts, but for textile ducts the upper limit of the air velocity figure may be augmented, since the amount of noise they emit is substantially lower than in the case of metal. The acceptable air velocity of textile ducts is from 6 to 10 m/s.

Graphic No. 2. Air emission for even energy distribution

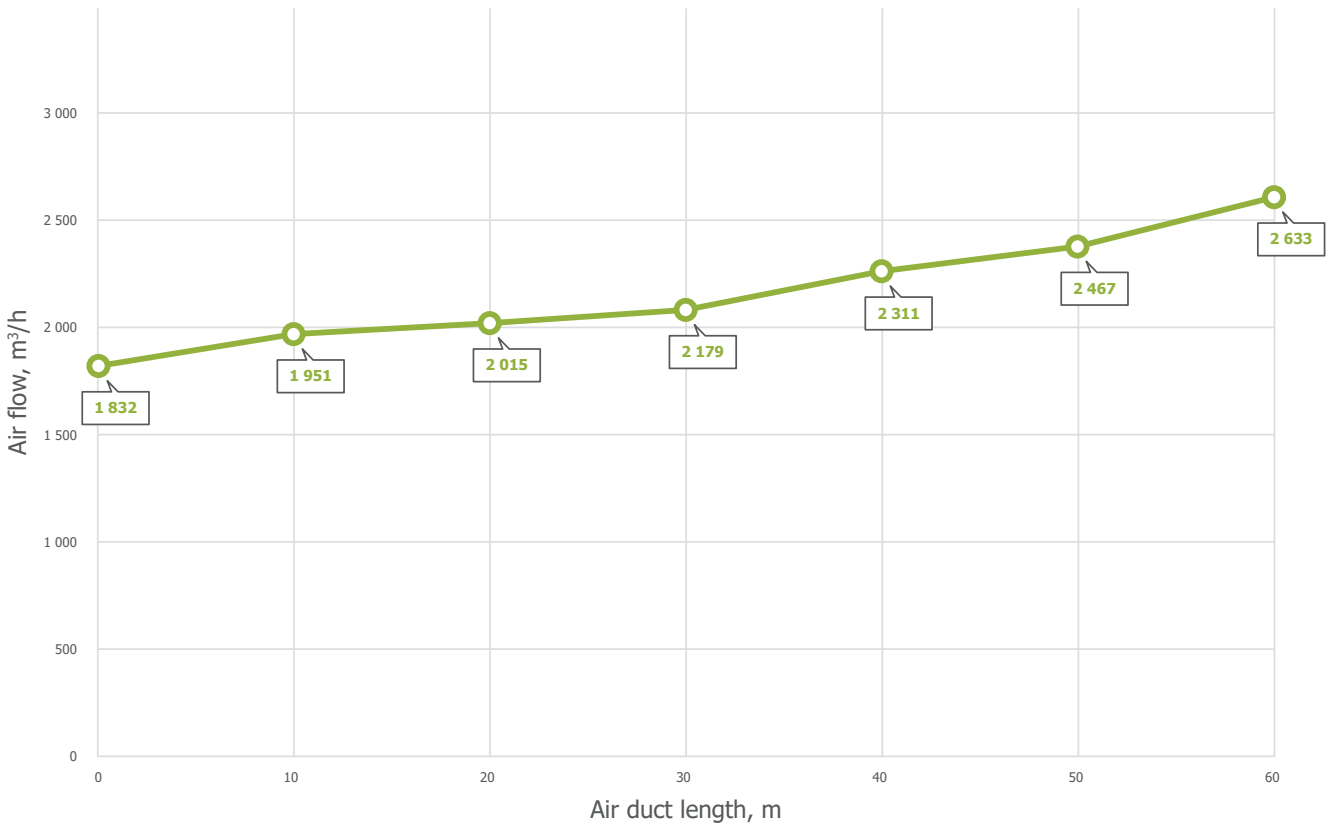

Fabric Duct Matching

CHOOSING THE AIR DUCT SHAPE

Air socks can come in different geometric shapes, such as a circle, a semi-circle, a segment, as well as a triangular or rectangular cross section. This offers a means for them to be used in a variety of facilities, since their shape allows the ducts to be adapted to any of the customer's requirements.

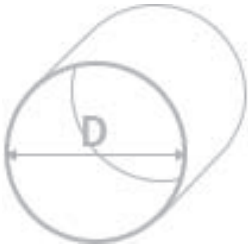

• Circular shape ducts are used in the case that there are no limitations as to the height of the suspension away from the floor/ceiling. The diameter of the duct in this case will be as small as possible for such an air flow.

• Semi-circular shaped ducts are used, as a rule, in facilities with low ceilings. In this case, we can augment the distance from the duct to the work area, which has a positive effect on the air's distribution. Also, an option in this instance is the use of segment-shaped ducts.

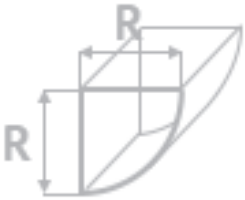

• Quarter-shaped air ducts find use in offices, conference halls, production facilities, and other types of facilities where ventilation for various reasons cannot be situated at the center of the facility, but rather much be placed along the walls.

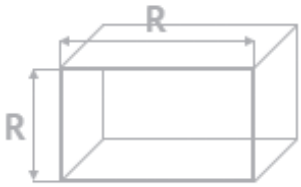

• Rectangular-shaped air ducts are usually used for exhaust. Their shape is supported by an aluminum shape frame.

OVERALL DIMENSIONS

The diameter of the ducts that TEXAIR installs ranges from 160 to 2,000 mm. This is, as a rule, enough to distribute an air current of between 200 and 70,000 m³/h.

The interval of the diameters usually corresponds to the spacing of zinc-coated ducts' diameters for convenience in calculating and replacing metallic ducts for textile ones. Also, adjoining and other sections of air socks are fully compatible with metallic shaped elements.

The length of separate air distribution segments can reach as much as two hundred meters and depends on such parameters as the duct's material, air flow, and air pressure. The duct is divided up into segments that connect to each other using zippers according to its design.

CALCULATION OF THE AIR DUCT DIAMETER

Determine the dimension for a circular duct, mm

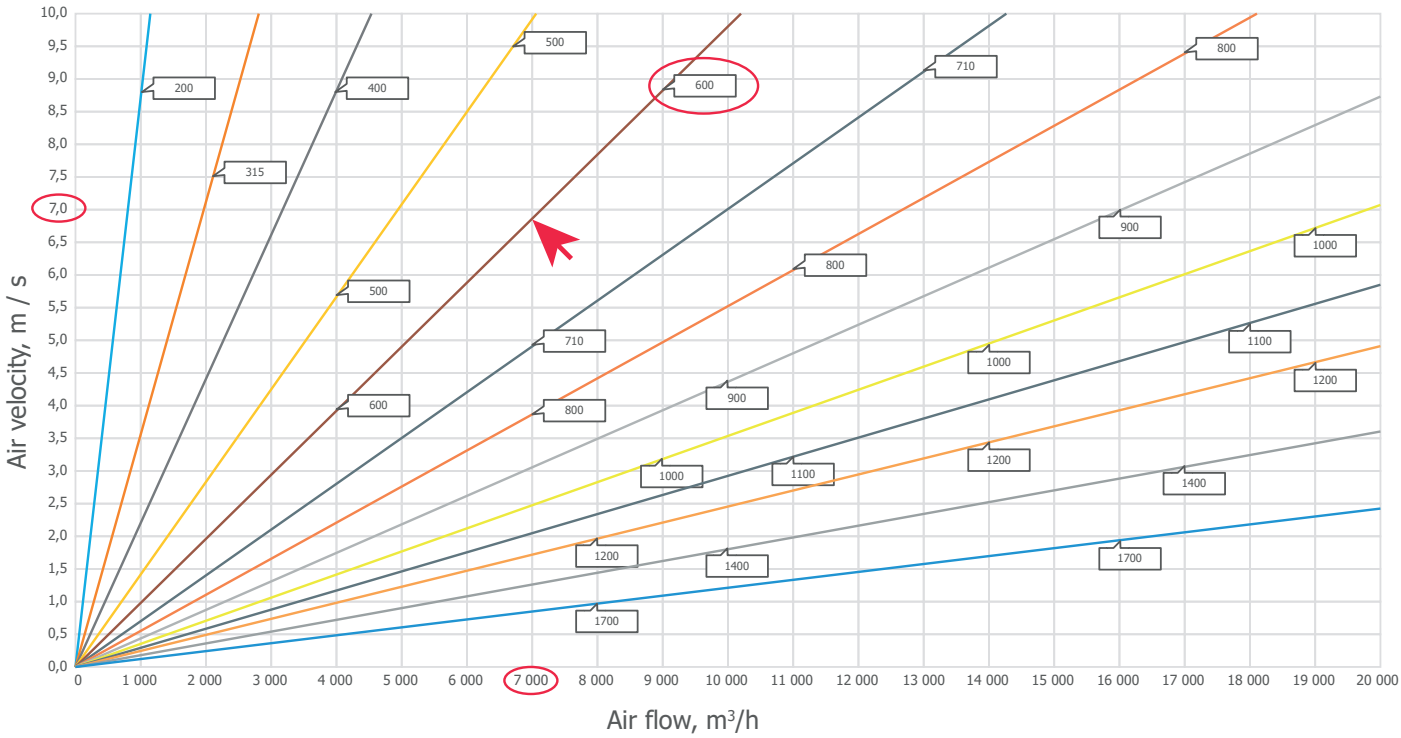

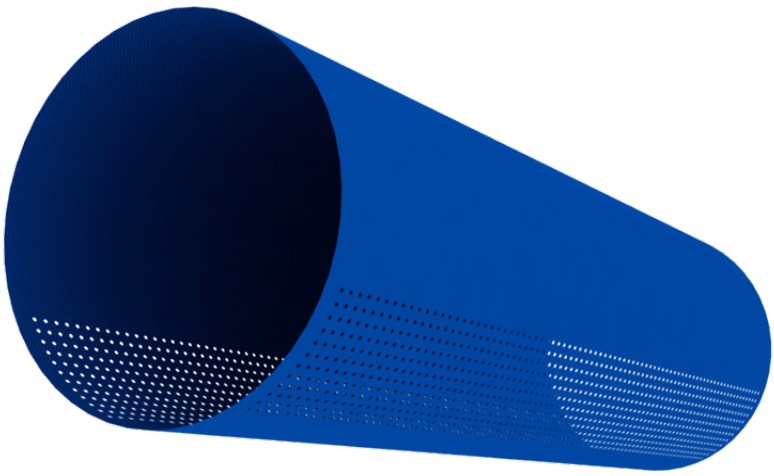

Fabric Duct Matching

CALCULATION OF THE AIR DUCT DIAMETER

Determine the dimension for a semicircular duct, mm

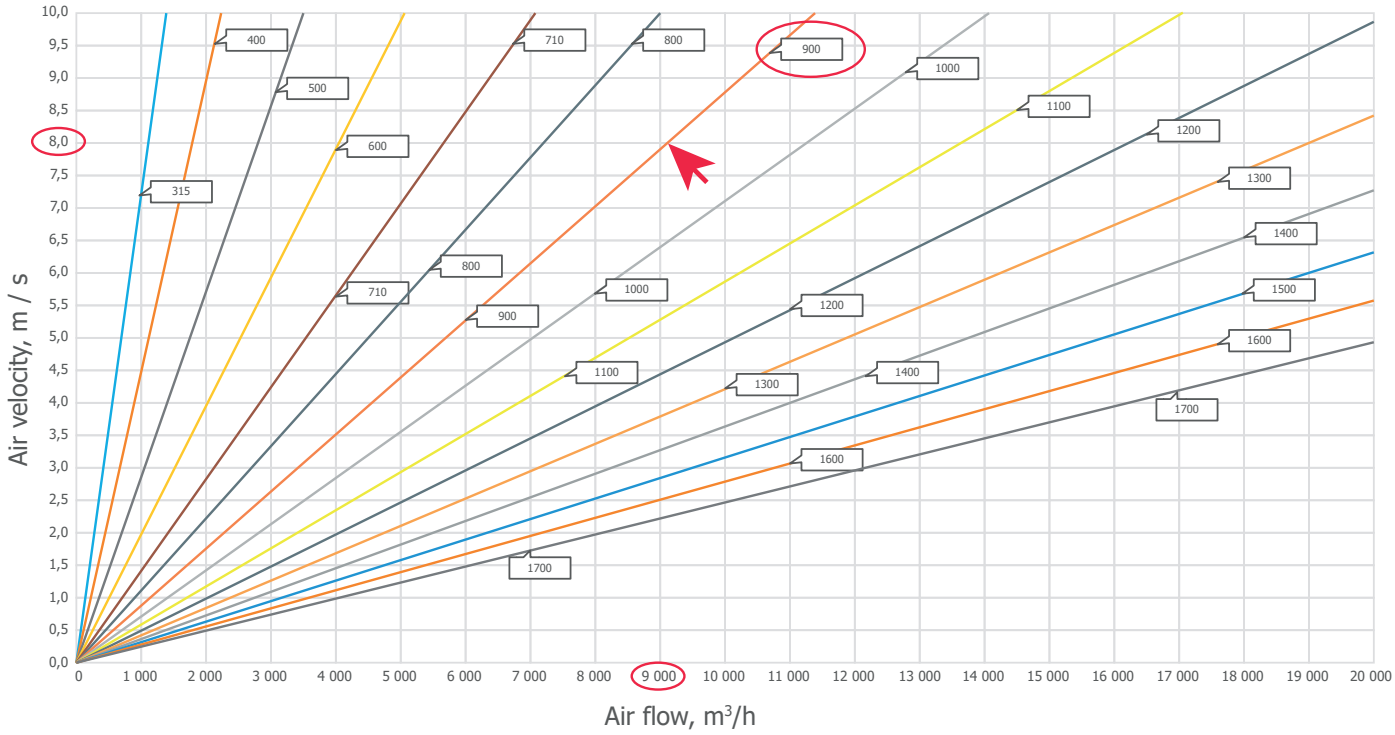

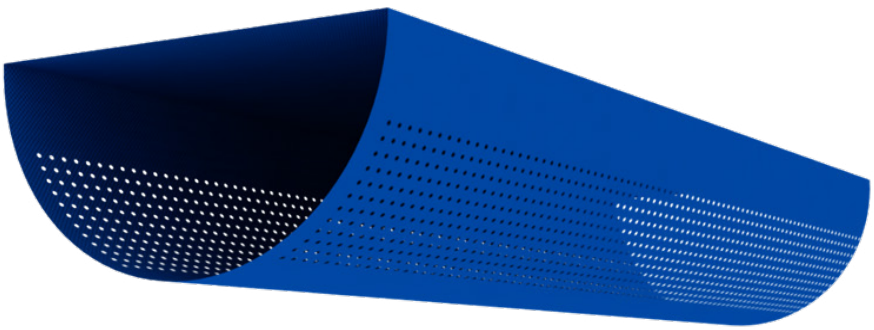

Determine the dimension for a quadrant duct, mm

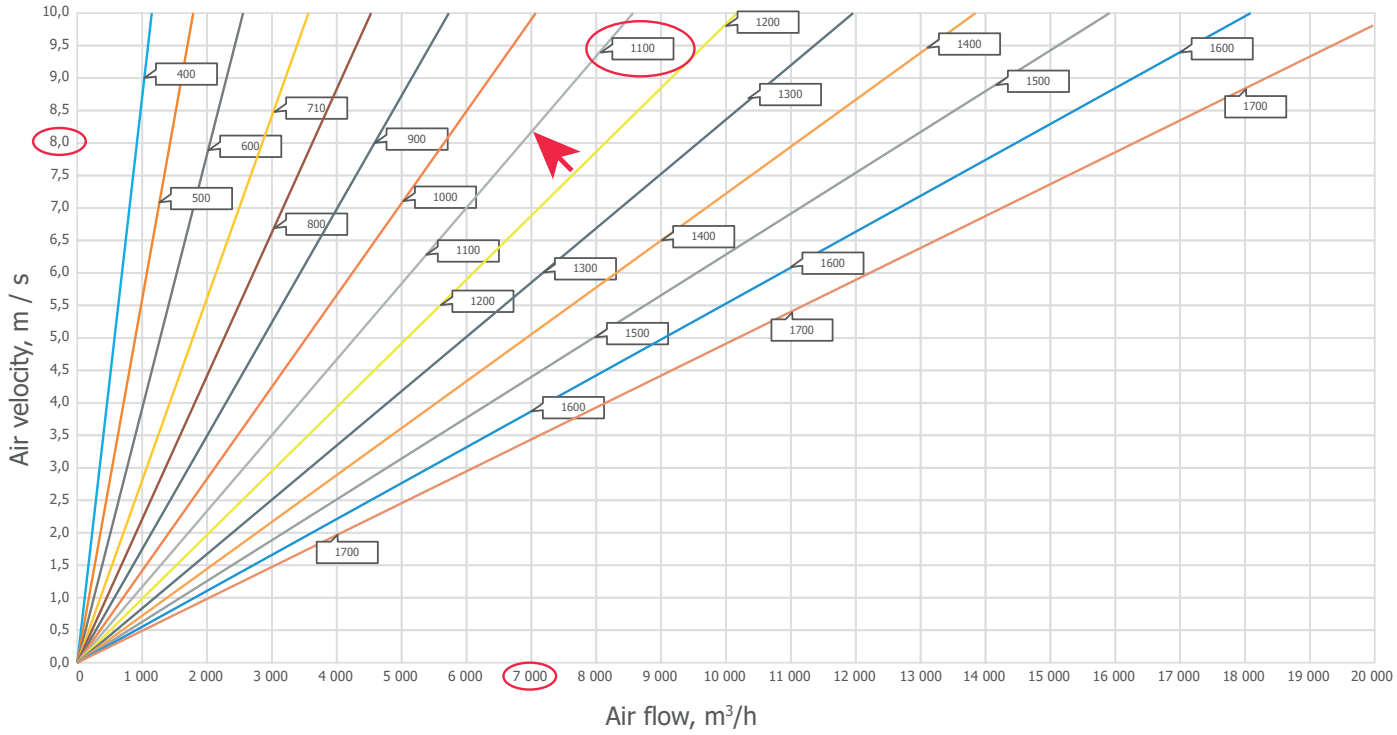

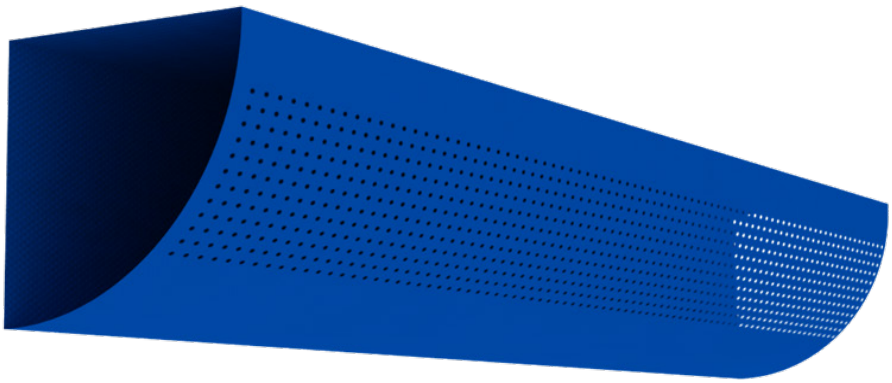

Fabric Duct Matching

CALCULATION OF THE AIR DUCT DIAMETER

Determine the dimension for a rectangular duct, mm

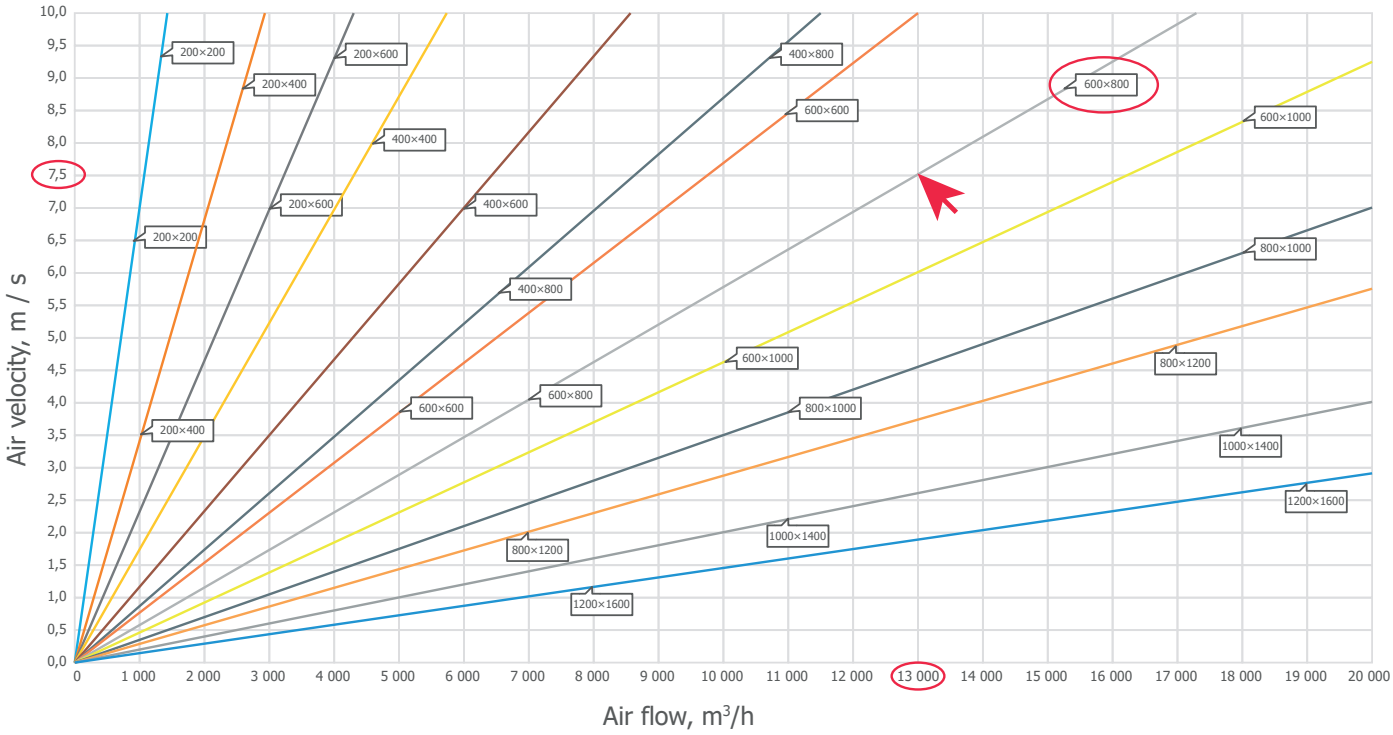

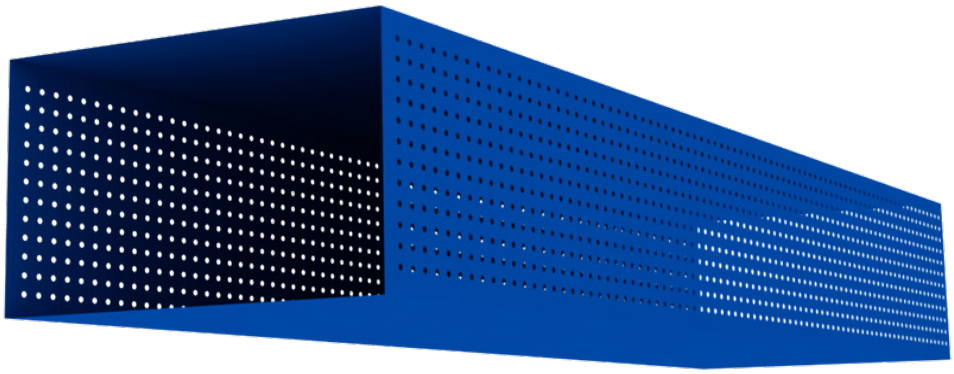

RELATIONSHIP BETWEEN DISTANCE TO WORK ZONE (V=0.25 M/S) AND PRESSURE

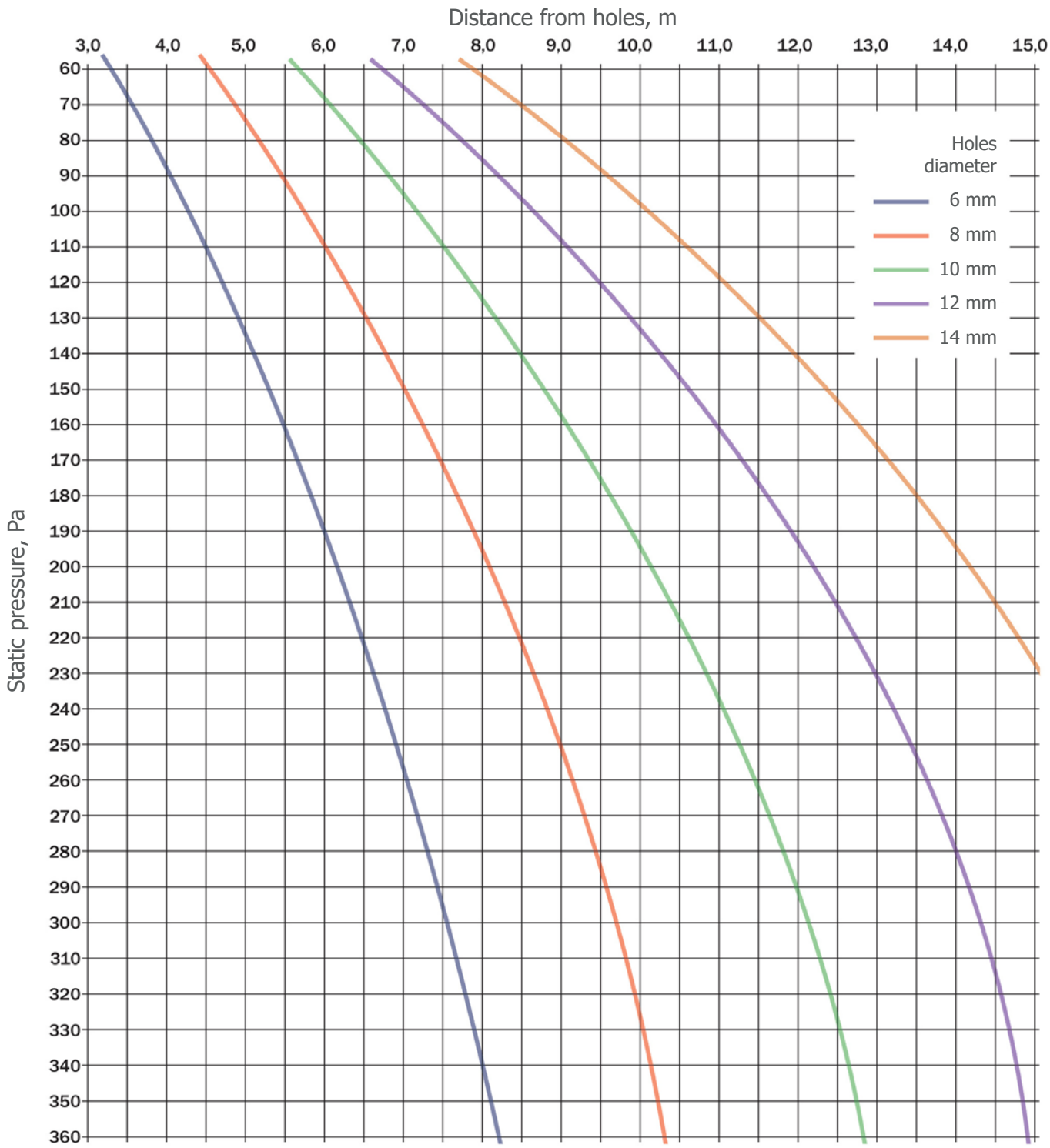

Shaped Elements

The air socks are just as good as metallic ducts when it comes to the flexibility of their installation.
TEXAIR conducts an entire spectrum of section-shaped wares necessary to construct lines of any configuration.

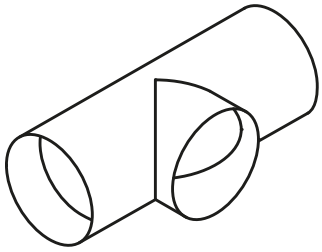

Outlet adapter

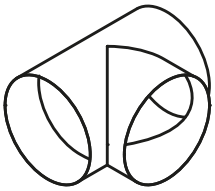

Branch pipe

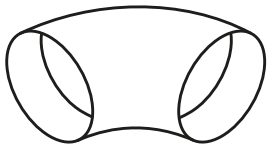

Elbow

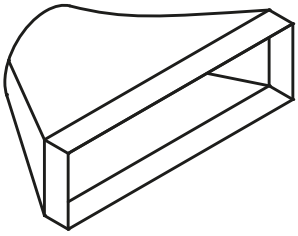

Circle-rectangle transition

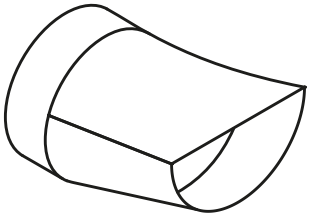

Circle-semicircle transition

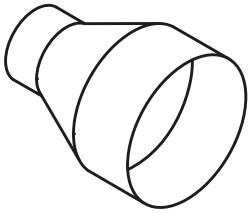

Circle-to-circle transition

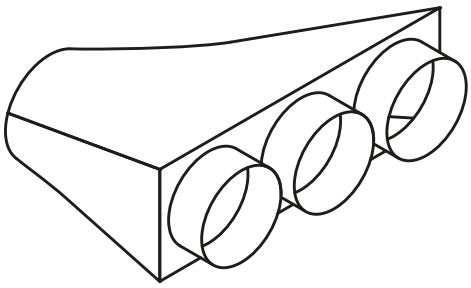

Asymmetrical collector

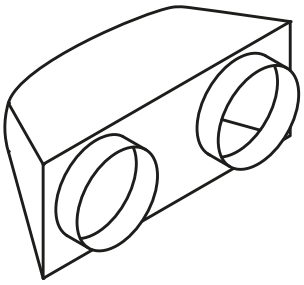

Symmetrical collector

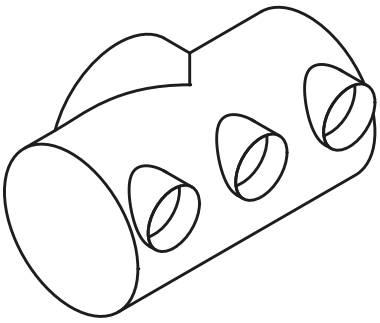

Cylindrical collector

Material Selection

Proper selection of the duct's materials requires data on the purpose of the system (for heating, ventilation, conditioning), the temperature of the air to be supplied, the type of facility, as well as whether any special conditions exist that must be taken into account (high temperature, moisture, clean facility, aggressive environment, etc.). High-quality materials are used for production with foundations and coating of various types (polyester, glass fiber, polyurethane, silicon, etc.). This provides a means to manufacture ducts suitable for operation at any facility, regardless of the specific factors present there or the complexity.

TEXAIR DUCTS MATERIALS' CHEMICAL RESISTANCE

Chemical substance	Air duct material		Material coating	
	Polyether (polyester)	Polyamide	Polyurethane (PUR)	Silicone (VMQ)
Acetone	–	*	–	*
Formylic acid	10%	–	/	*
Ammonia	–	20%	/	+
Benzine	+	+	+	+
Benzol	+	–	+	–
Brake fluid	+	60°C	/	+
Butane	/	+	/	–
Butyl alcohol	+	+	/	–
Calcium chloride	+	+	/	/
Benzine chloride	+	*	–	–
Diesel oil	+	/	+	*
Vinegar acid	40%	–	/	–
Formaldehyde	30%	+	/	+
Freon 113	+	/	/	/
Fruit juice	+	+	+	+
Glycerin	+	+	+	+
Fuel oil	+	+	+	*
Hydraulic oil	+	+	/	*
Potassium alkali	–	–	/	/
Potassium chloride	+	+	+	+
Potassium hydroxide	–	/	–	*
Flax seed oil	+	+	+	*
Methanol	–	*	/	+
Dichloromethane	–	–	–	–
Lactic acid	+	10%	/	/
Mineral oils	+	+	+	+
Motor oils	+	+	+	+
Sodium carbonate	+	+	/	/
Sodium chloride	+	10%	+	+
Sodium hydroxide	–	/	–	*
Sodic alkali	40%	10%	/	–
Hydrogen nitrate	10%	–	–	–
Hydrochloric acid	+	–	–	/
Lube oil	+	+	+	+
Carbon bisulphide	–	*	/	–
Sulphuric acid	70%	–	/	25%
Soap solution	+	+	*	+
Cleaner	/	/	*	+
Terebenthene	+	+	/	–
Tetrachlorolnethane	+	*	–	–
Toluene	+	+	–	–
Trichloroethylene	–	–	–	–
Water (any)	+	+	+	+
Tartaric acid	+	+	+	+
Dimethylbenzene	+	+	–	–
Zinc sulphate	+	/	/	+
Citric acid	+	10%	/	+

Table conventions

+	stable at any concentration
%	stable in a maximum % concentration
°C	stable up to a maximum temperature
*	conditionally stable
-	unstable
/	no data

TYPES OF FABRIC

Types of fabrics	Structure	Quantity of colors
TEX-Sti	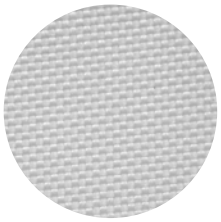	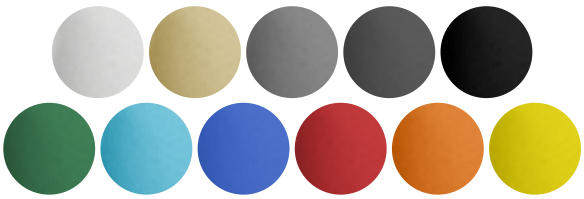
TEX-Stp	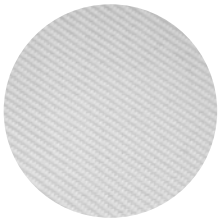	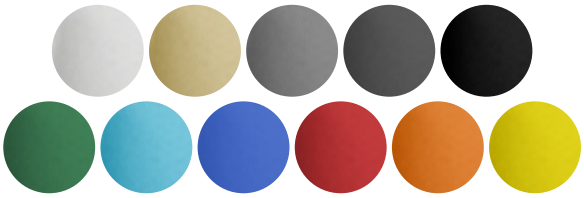
TEX-StiF	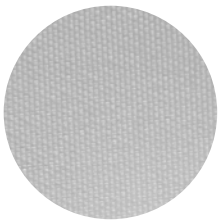	
TEX-Lti	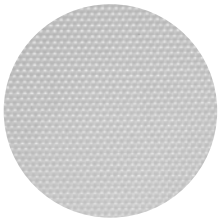	
TEX-Ltp	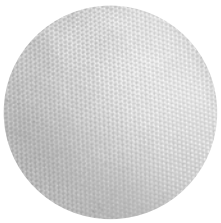	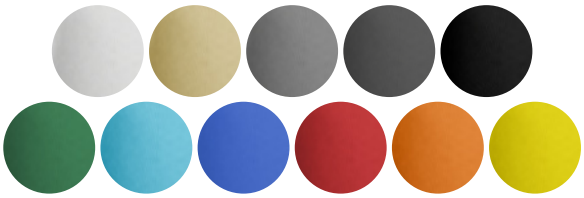
TEX-Lti-RS	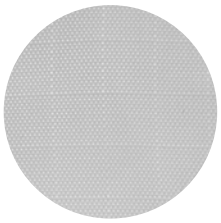	
TEX-Fsi		
TEX-Fpu	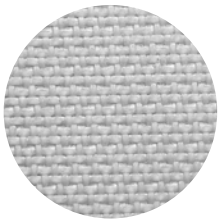	

Fabric contents	Air permeability	Temperature range	Breaking load	Fabric weight	Fire rating	Machine washable
100% Polyester	no	-50 ... +110 °C	basis 160-230 kgf, weft 110-180 kgf	240 g/m²	–	yes
100% Polyester	yes	-50 ... +90 °C	basis 140-220 kgf, weft 100-170 kgf	230 g/m²	B	yes
100% Polyester	no	-50 ... +250 °C	basis 180-250 kgf, weft 130-200 kgf	290 g/m²	B	yes
100% Polyester	no	-40 ... +90 °C	basis 80-150 kgf, weft 45-80 kgf	90 g/m²	–	yes
100% Polyester	yes	-40 ... +90 °C	basis 80-150 kgf, weft 45-80 kgf	90 g/m²	–	yes
100% Polyester	no	-40 ... +90 °C	basis 100-150 kgf, weft 55-90 kgf	70 g/m²	–	yes
100% Fiberglass	no	-60 ... +380 °C	basis 100-150 kgf, weft 55-90 kgf	570 g/m²	A	no
100% Fiberglass	no	-60 ... +380 °C	basis 100-150 kgf, weft 55-90 kgf	510 g/m²	A	no

Installation

Air socks can come in different geometric shapes, such as a circle, a semi-circle, a segment, as well as a triangular or rectangular cross section. This offers a means for them to be used in a variety of facilities, since their shape allows the ducts to be adapted to any of the customer's requirements.

9 types of installation of textile air ducts are presented for the consumer

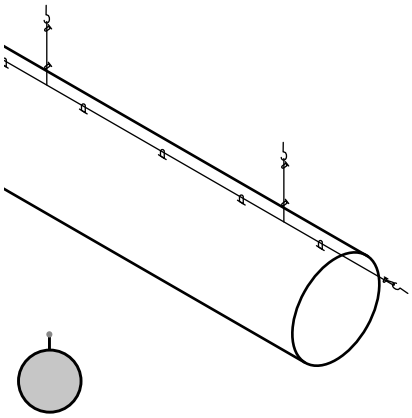

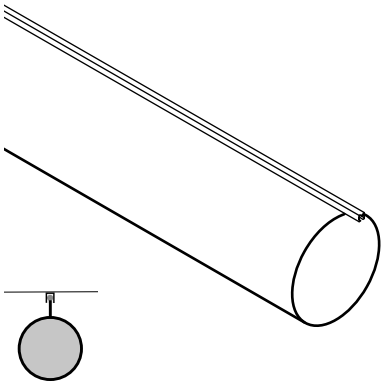

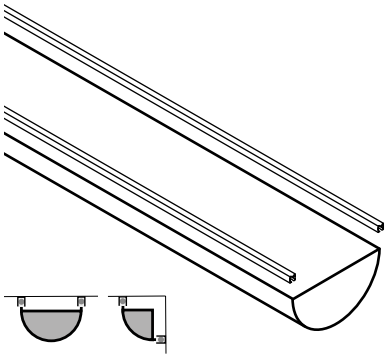

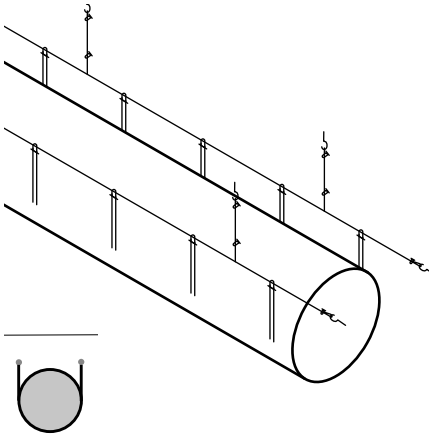

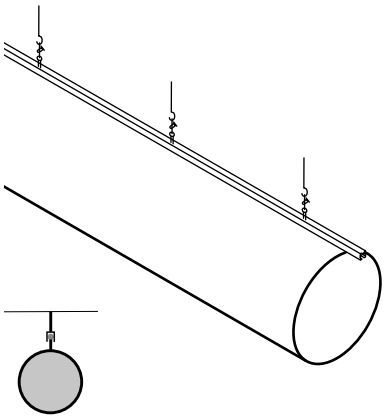

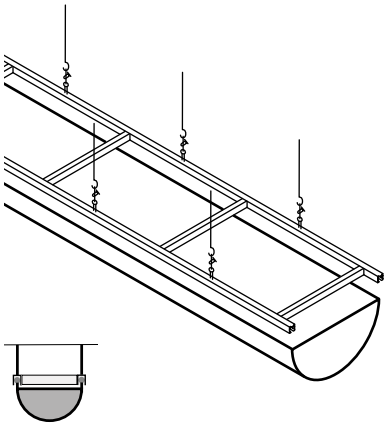

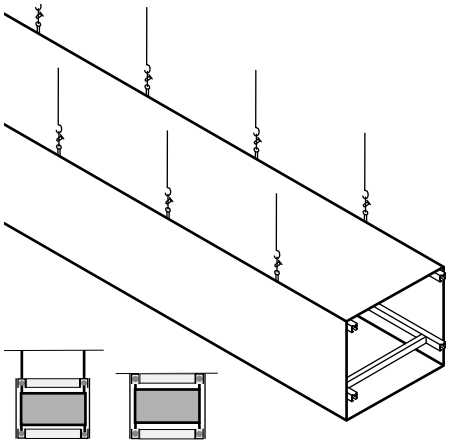

Methods for assembling fabric air ducts

Example of air sock assembly works on a mono-track cable

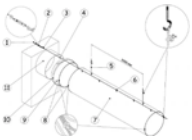

scan a QR code
on your phone or
click on image

Working Drawings

TEXAIR is a full cycle company capable of controlling the entire production process, from the design stage all the way to the shipping of the finished products.

We create a full package of work documentation for our customers. The customer receives a working draft of the designed air duct system and after it is approved, the order is sent into production. Supplied along with the finished products is the work project: overall view (Fig. 1), a 2D or 3D work draft with sectional drawings indicating the location of perforation, the direction of air flows and materials specification (Fig. 2-3-etc.), and installation manual (Fig. 4).

Fig. 1: overall view

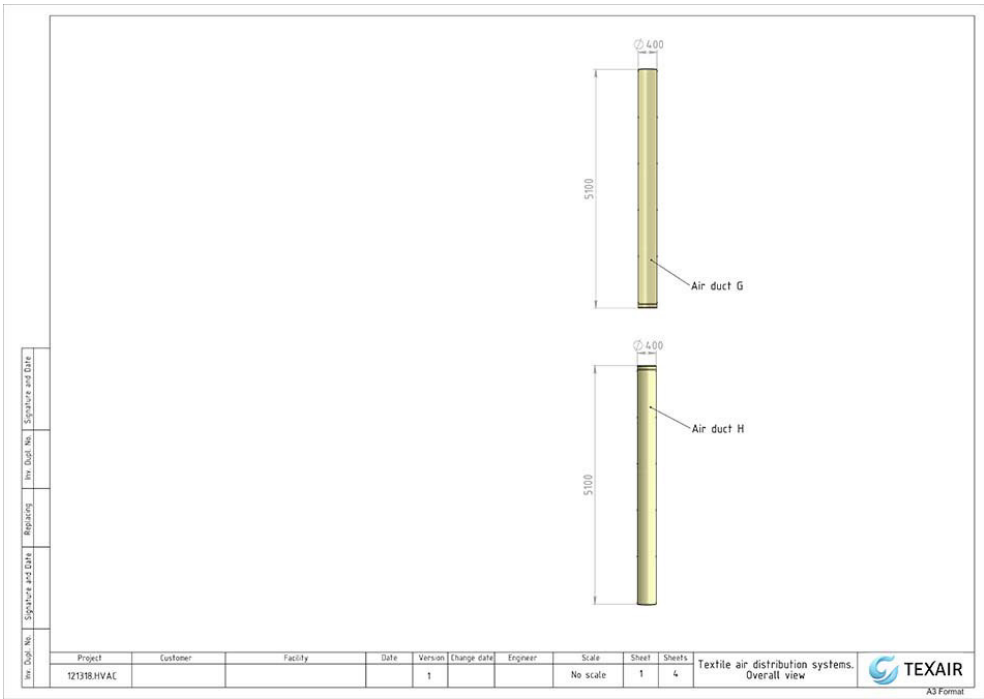

Fig. 2: 2D or 3D work draft with sectional drawings indicating the location of perforation, the direction of air flows and materials specification

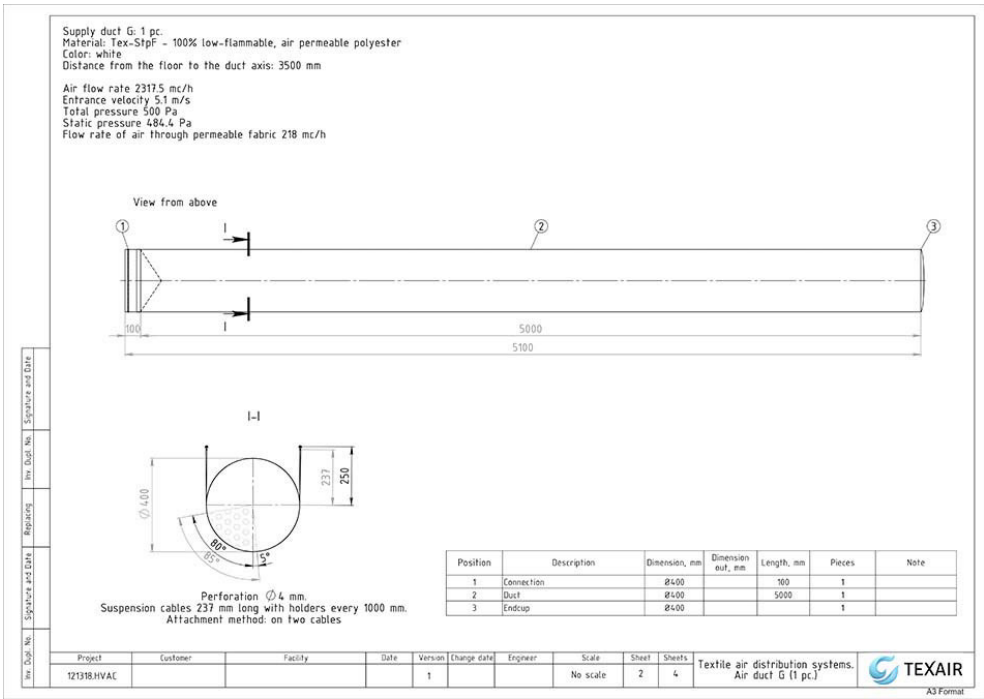

Working Drawings

Fig. 3: 2D or 3D work draft with sectional drawings indicating the location of perforation, the direction of air flows and materials specification

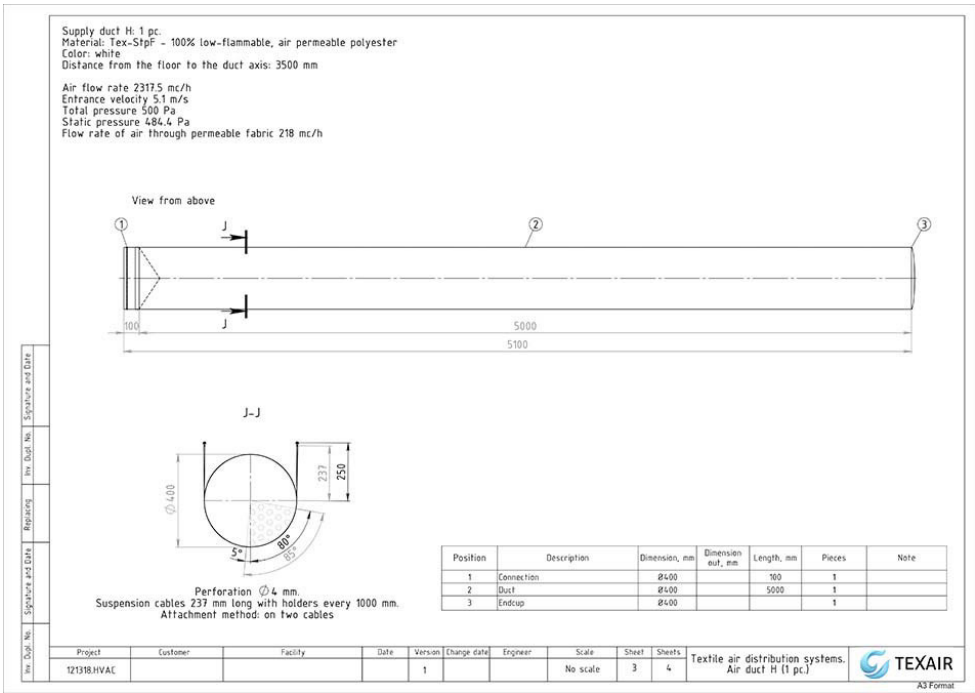

Fig. 4: installation manual

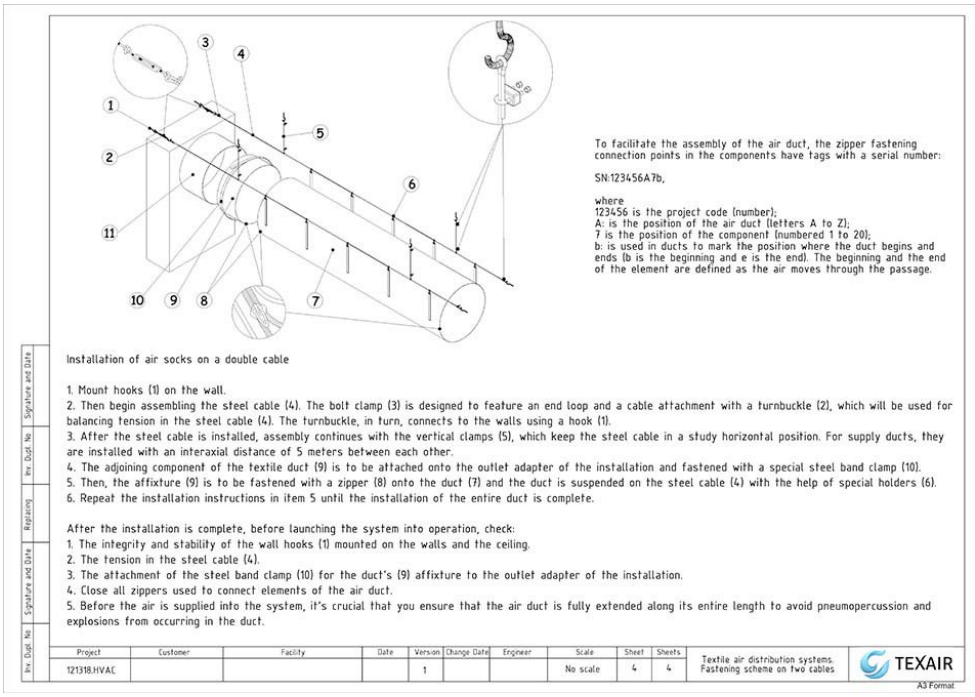

Technical Service and Guarantee

AIR SOCKS LIFESPAN MAINTENANCE

The service lifetime of the air socks directly depends on the type of fabric, conditions of use, and in the event that the producer's requirements are observed can extend to over 15 years. Having air filters in the ventilation systems is a required condition of the warranty.

• The producer provides a 10-year warranty on the materials TEX-Sti, TEX-Stp.

• The producer provides a 2-year warranty on materials TEX-StiF, TEX-Lti, TEX-Ltp, TEX-Lti-RS.

• The producer provides a one year warranty on materials TEX-Fsi, TEX-Fpu.

• The fitting and attachment elements come with a warranty of one year.

Product certificates serve as the document confirming the warranty. «Air socks» correspond to the government's sanitary and epidemiological rules and norms. The producer guarantees that the established parameters in the product's mode of operation and reliability figures are provided for assuming that the Customer observes the technical parameters over the entire course of the product's use.

In the case that during the warranty period production defects are discovered on the product or segments of it at the fault of the manufacturer, the latter will be obliged to eliminate the defects or replace the failed section components within the shortest time period technically possible.

PACKAGING

Packaging is conducted according to the manufacturing company's documentation and ensures the preservation of the air ducts during shipping in covered vehicles of any type.

Packaging of the ducts is performed in an indoor ventilated facility with an environmental temperature of 15 to 35°C with a relative moisture of up to 80% of aggressive admixtures in the environment.

COMPLETE PACKAGE

The air duct package upon delivery includes:

• Air flow equalizers (cone-shaped net at the entrance for dispersing air);

• Input adapters for connecting textile channels;

• Cable or profile suspension holders (attached to the surface of the duct);

• Required shaped elements;

• Work documentation package (work drafts, specification, assembly scheme, product certificate).

MAINTENANCE

Aggressive environments and frequent washing reduce the product's service lifetime. The manufacturer does not indicate any particular requirements regarding the frequency in which the products are washed and leaves this up to the discretion of the organization and the corresponding regulation of the institution where the product will be used. The air socks' washing may be performed by hand or in a washing machine in accordance with the following directions:

• Washing must be performed using not particularly harsh washing or disinfecting tools at a temperature no higher than 45°C over the course of 15 minutes.

• Drying should occur at room temperature and depending on the type of fabric should not take more than 3-4 hours.

DRYING AT A 45° C TEMPERATURE

TUMBLE DRYING IN PARTIAL

EXECUTION MODE

IRONING PROHIBITED

CHEMICAL CLEANING PROHIBITED

Certificates

FOREST AND WOOD PRODUCTS
RESEARCH AND DEVELOPMENT INSTITUTE

Page 1 of 4

„MEŽA UN KOKSNES PRODUKTU PĒTNIECĪBAS UN ATTĪSTĪBAS INSTITŪTS" SIA
VAT No. LV 43603022749
Dobeles iela 41, Jelgava, LV-3001, Latvia
Phone +371 63010605 * E-mail meka@e-koks.lv * Web www.e-koks.lv

LATAK-T-316

Classification of reaction to fire in accordance with EN 13501-1:2018

Issue number: K32/2019

Date of issue: 03.07.2019.

Sponsor: OLIL SIA.

Address: Anniņmuižas iela 4-57, Rīga, LV-1029, Latvia.

Reg. No. 50003653581.

Owner of classification report: OLIL SIA.

Manufacturer: Texair Asia Limited.
Address: 18/F, East Town Building 41 Lockhart Road, Wan Chai, Hong Kong.
Reg.No. 2795356.

Prepared by: SIA "Meža un koksnes produktu pētniecības un attīstības institūts" *(Forest and Wood Products Research and Development Institute Ltd).*

Test performed at: SIA "Meža un koksnes produktu pētniecības un attīstības institūts" *(Forest and Wood Products Research and Development Institute Ltd).*

Product name: Fiberglass textile with silicone coating Tex-Fpu.

Laboratory involved in testing is accredited by the Latvian National Accreditation Bureau (LATAK) according to the standard LVS EN ISO/IEC 17025 under the terms of Latvian legislation with reg. No. T-316. Laboratory is a notified body with reg. No. NB 2040 under construction product regulation No. 305/2011.

Classification report refers only to these test objects. This classification report may not be reproduced otherwise than in full text, excepted with the prior written approval of the Forest and Wood Products Research and Development Institute

VL-87-03

Report No. K32/2019 page 2 of 4

1. Introduction

This classification report defines the reaction to fire classification assigned to fiberglass textile with silicone coating Tex-Fpu in accordance with the procedures given in EN 13501-1:2018.

2. Details of classified product

2.1. General

Fiberglass textile with silicone coating Tex-Fpu is defined as material for textile air ducts.

2.2. Product description
- Product name: Fiberglass textile with silicone coating Tex-Fpu.
- Manufacturer: Texair Asia Limited.
- Materials used for manufacturing:
  - glass fibre;
- Nominal thickness tested: 0.44 mm.
- Colour tested: light grey.
- Surface mass/area: 510 g/m².

3. Test reports and test results in support of classification
3.1. Specific conditions
Not applicable

3.2. Test reports

Name of laboratory	Name of sponsor	Test reports	Test method
SIA „Meža un koksnes produktu pētniecības un attīstības institūts" Testing Laboratory	OLIL SIA	3824-1/2019	EN 13823:2010+A1:2014
SIA „Meža un koksnes produktu pētniecības un attīstības institūts" Testing Laboratory	OLIL SIA	3824-2/2019	EN ISO 1716:2018

Report No. K32/2019 page 3 of 4

3.3. Test results

Test method	Parameter	Number of tests	Results	
			Continuous parameter mean	Compliance parameters
EN 13823:2010+A1:2014	$FIGRA_{0.2MJ}$ (W/s)	3	2.7	Compliant
	$FIGRA_{0.4MJ}$ (W/s)		2.7	(-)
	THR_{600s} (MJ)		0.4	Compliant
	LFS		<1000 mm	Compliant
	SMOGRA (m²/s²)		Threshold not reached	Compliant
	TSP_{600s} (m²)		28.6	Compliant
	Flaming droplets <10s		no	Compliant
	Flaming droplets >10s		no	Compliant
EN ISO 1716:2018	Gross heat of combustion Q_{GCV} (MJ/kg)	3	1.8256	Compliant

(-) not applicable

4. Classification and field of application

4.1. Reference of classification

This classification has been carried out in accordance with clause 11 of EN 13501-1:2018.

4.2. Classification

Fiberglass textile with silicone coating Tex-Fpu in relation to its reaction to fire behaviour is classified:

A2

The additional classification in relation to smoke production is:

s1

The additional classification in relation to flaming droplets/particles is:

d0

The format of the reaction to fire classification for construction product excluding floorings and linings is:

Fire behaviour		Smoke production			Flaming droplets	
A2	-	s	1	,	d	0

Reaction to fire classification: A2-s1-d0

Report No. K32/2019 page 4 of 4

4.3. Field of application

4.3.1 This classification is valid for the following product end use applications:

Product primary is intended to use as material for textile air ducts.

4.3.2. This classification is also valid for following product parameters:
Thickness: valid for product thickness as tested.
Composition: valid only for product composition as tested.
Product surface mass/area: valid only for product surface mass/area as tested.

4.3.3. Classification valid for installation parameters:

Mounting: valid for product mounting as free standing and ventilated constructions.
Substrates: product performance determined without substrates and classification is valid for product mounting without substrates.
Joints: product tested without joints.
Orientation: not applicable.

5. Limitations.

5.1. No restrictions on the duration of validity of this classification report as long as the product specifications remain unchanged.
5.2. This document does not represent type approval or certification of the product.

Prepared by: E.Bukšāns
Reviewed by: K.Bārmanis

FOREST AND WOOD PRODUCTS
RESEARCH AND DEVELOPMENT INSTITUTE

„MEŽA UN KOKSNES PRODUKTU PĒTNIECĪBAS UN ATTĪSTĪBAS INSTITŪTS" SIA
VAT No. LV 43603022749
Dobeles iela 41, Jelgava, LV-3001, Latvia
Phone +371 63010605 * E-mail meka@e-koks.lv * Web www.e-koks.lv

LATAK-T-316

Classification of reaction to fire in accordance with EN 13501-1:2018

Issue number: K26/2019

Date of issue: 03.07.2019.

Sponsor: OLIL SIA.

Address: Anniņmuižas iela 4-57, Rīga, LV-1029, Latvia.

Reg. No. 50003653581.

Owner of classification report: OLIL SIA.

Manufacturer: Texair Asia Limited.
Address: 18/F, East Town Building 41 Lockhart Road, Wan Chai, Hong Kong.
Reg.No. 2795356.

Prepared by: SIA "Meža un koksnes produktu pētniecības un attīstības institūts" *(Forest and Wood Products Research and Development Institute Ltd).*

Test performed at: SIA "Meža un koksnes produktu pētniecības un attīstības institūts" *(Forest and Wood Products Research and Development Institute Ltd).*

Product name: Polyester textile with polyurethane coating Tex-StiF.

Laboratory involved in testing is accredited by the Latvian National Accreditation Bureau (LATAK) according to the standard LVS EN ISO/IEC 17025 under the terms of Latvian legislation with reg. No. T-316. Laboratory is a notified body with reg. No. NB 2040 under construction product regulation No. 305/2011.

VL-87-03

1. Introduction

This classification report defines the reaction to fire classification assigned to polyester textile with polyurethane coating Tex-StiF in accordance with the procedures given in EN 13501-1:2018.

2. Details of classified product

2.1. General

Polyester textile with polyurethane coating Tex-StiF is defined as material for textile air ducts.

2.2. Product description
- Product name: Polyester textile with polyurethane coating Tex-StiF.
- Manufacturer: Texair Asia Limited.
- Materials used for manufacturing:
  - polister 3000X4000;
- Nominal thickness tested: 0.25-0.40 mm.
- Colour tested: light grey.
- Surface mass/area: 293 g/m².

3. Test reports and test results in support of classification
3.1. Specific conditions
Not applicable

3.2. Test reports

Name of laboratory	Name of sponsor	Test reports	Test method
SIA „Meža un koksnes produktu pētniecības un attīstības institūts" Testing Laboratory	OLIL SIA	3823-1/2019	EN 13823:2010+A1:2014
SIA „Meža un koksnes produktu pētniecības un attīstības institūts" Testing Laboratory	OLIL SIA	3823-2/2019	EN ISO 11925-2:2010

3.3. Test results

Test method	Parameter	Number of tests	Results: Continuous parameter mean	Results: Compliance parameters
EN 13823:2010+A1:2014	$FIGRA_{0.2MJ}$ (W/s)	3	2.7	Compliant
	$FIGRA_{0.4MJ}$ (W/s)		2.7	(-)
	THR_{600s} (MJ)		0.4	Compliant
	LFS		<1000 mm	Compliant
	$SMOGRA$ (m²/s²)		Threshold not reached	Compliant
	TSP_{600s} (m²)		28.6	Compliant
	Flaming droplets <10s		no	Compliant
	Flaming droplets >10s		no	Compliant
EN ISO 1716:2018	Gross heat of combustion Q_{GCV} (MJ/kg)	3	1.8256	Compliant

(-) not applicable

4. Classification and field of application

4.1. Reference of classification

This classification has been carried out in accordance with clause 11 of EN 13501-1:2018.

4.2. Classification

Fiberglass textile with silicone coating Tex-Fpu in relation to its reaction to fire behaviour is classified:

A2

The additional classification in relation to smoke production is:

s1

The additional classification in relation to flaming droplets/particles is:

d0

The format of the reaction to fire classification for construction product excluding floorings and linings is:

Fire behaviour		Smoke production			Flaming droplets	
A2	-	s	1	,	d	0

Reaction to fire classification: A2-s1-d0

4.3. Field of application

4.3.1 This classification is valid for the following product end use applications:

Product primary is intended to use as material for textile air ducts.

4.3.2. This classification is also valid for following product parameters:
Thickness: valid for product thickness as tested.
Composition: valid only for product composition as tested.
Product surface mass/area: valid only for product surface mass/area as tested.

4.3.3. Classification valid for installation parameters:

Mounting: valid for product mounting as free standing and ventilated constructions.
Substrates: product performance determined without substrates and classification is valid for product mounting without substrates.
Joints: product tested without joints.
Orientation: not applicable.

5. Limitations.

5.1. No restrictions on the duration of validity of this classification report as long as the product specifications remain unchanged.
5.2. This document does not represent type approval or certification of the product.

Prepared by: E.Bukšāns
Reviewed by: K.Bāmanis

Reference List

84 000 m³/h (total, 3 ducts), 300 Pa

98 000 m³/h (total, 15 ducts), 100 Pa

138 400 m³/h (total, 9 ducts), 100-250 Pa

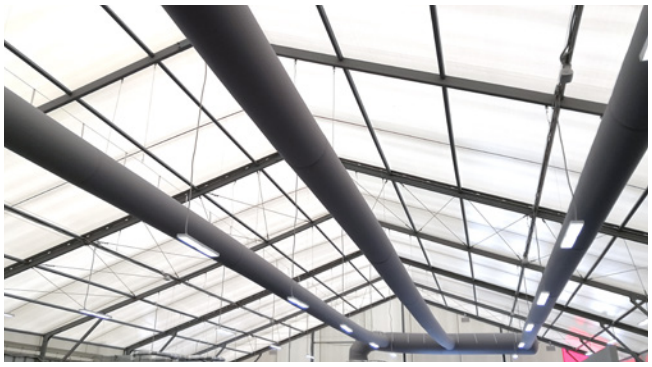

11 680 m³/h, 100 Pa

9 300 m³/h (total, 4 ducts), 100 Pa

87 400 m³/h (total, 4 ducts), 100 Pa

190 500 m³/h (total, 12 ducts), 100-200 Pa

3 340 m³/h, 100 Pa

FULL VERSION ON THE WEBSITE AT THE LINK

scan a QR code on your phone or click on image

360 000 m³/h (total, 6 ducts), 700 Pa

21 200 m³/h (total, 3 ducts), 100 Pa

9 900 m³/h (total, 3 ducts), 100-150 Pa

22 000 m³/h, (total, 4 ducts), 100 Pa

11 000 m³/h, 100 Pa

14 400 m³/h (total, 2 ducts), 100 Pa

10 800 m³/h , 100 Pa

360 m³/h, 50 Pa

FULL VERSION ON THE WEBSITE AT THE LINK

scan a QR code on your phone or click on image

Special Solutions

RECTANGULAR EXHAUST DUCT

TEXAIR extract air ducts are made of air impermeable fabrics and are available in a rectangular version.

In order for such air duct to work in the most optimal way, it is necessary to observe the conditions for good tension of the fabric in the longitudinal and transverse directions. To this end, tensioning devices in the inner profiles and tensioning cross beams are used in the design of the duct.

Created by negative static pressure, air suction into the duct through rows of perforations that can be positioned on either side and anywhere in the duct. Uniform air extraction velocity is achieved by carefully calculated hole diameters and distances between them.

Often such air ducts are used in rooms with is a need for regular, and often very thorough, cleaning of the structure. TEXAIR textile air ducts are ideal for this procedure. They are easy to assemble and dismantle, can be disassembled into separate elements.

TEX-REXHAUST (ROUND EXHAUST DUCT)

TEXAIR circular exhaust air ducts are designed for ventilation and air conditioning systems, air transportation, domestic and industrial exhaust systems, gas removal.

The basis of the exhaust system is a cylindrical frame made of composite material, which provides the rigidity of the spatial structure. This frame performs the main function - it serves to form a solid foundation for the future product, provides and maintains the required duct diameter. This ensures the required air flow rate inside the exhaust duct along the entire length of the route.

Exhaust ducts are installed using universal hangers that allow you to mount the ducts both on a rail and on a cable. The solution is a special plastic holder, which is fixed with a textile suspension directly on the duct section. The design of the hanger can also be customized for height adjustment of the suspension.

• A unique innovative solution to reduce the weight of the ventilation systems allows for a significant wall, ceiling and roof load reduction.

• Quick-detachable outer fabric layer allows for easy cleaning of the ducts, and also greatly simplifies the process of maintenance of the ventilation system.

• The round shape of the exhaust duct, in contrast to the rectangular one, allows to achieve a more uniform air flow rate across the section.

• Different color solutions available, using fire rated materials, as well as applying the logo on the fabric.

Special Solutions

TEX-CLEAR DUCT

Transparent air ducts are made of elastic, abrasion and aggressive media resistant material - polyurethane. Unlike PVC, this material does not lose elasticity at temperatures down to -30°C, and also is amenable to laser cutting, like other TEXAIR fabrics.

Duct sections can be of different lengths and are connected along the length with zippers.

The main advantage of these air ducts is that due to their transparency, it is very easy to visually control the degree of their pollution, and to clean them in a timely manner. This is especially important in rooms with specific requirements for cleanliness.

Also, the air ducts have a smooth, non-porous surface that does not absorb dirt at all. This allows to treat the air duct with various detergents without even removing it.

This solution will be very convenient for rooms in which the equipment washing process is constant, because these air ducts can be cleaned together with other technological equipment.

INSULATED AIR DUCTS

Transparent air ducts are made of elastic, abrasion and aggressive media resistant material - polyurethane. Unlike PVC, this material does not lose elasticity at temperatures down to -30°C, and also is amenable to laser cutting, like other TEXAIR fabrics.

Insulated air ducts are mainly used for transition segments where air of a certain temperature must be supplied into the emission area, keeping in account the loss of heat energy along the air duct's entire length. Such a system provides a means to minimize changes in temperature along the air duct.

A synthetic nonflammable material is used for insulation, which is located between the external and internal fabric layer. Also, air ducts such of these do a wonderful job of insulating sound.

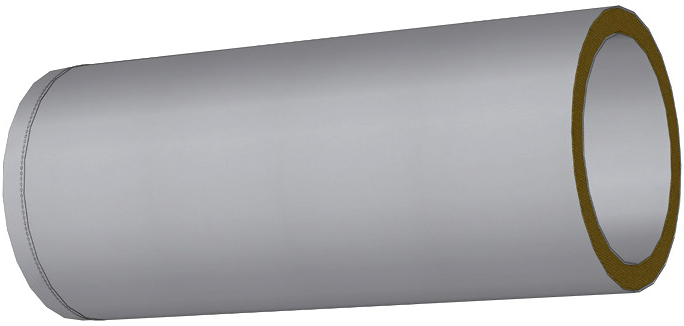

Special Solutions

TEXTILE DEFROSTER TEX-DEFROST

The textile defroster is made for quicker defrosting of the evaporators, as well as adjustment of the direction and velocity of cold air flow inside the room. The product is used for air coolers with horizontal air supply.

AIR COOLER DEFROSTING

When evaporator is set to defrosting mode, cold air supply stops. The product sags and closes the fan, isolating the external environment from the heat generation process by the system. Heat is stored inside the air cooler, which reduces the defrosting time of the air cooler by up to 50%.

The textile defroster is designed in the way that no ice or moisture forms inside the product. Using textile is the reason that ice is not formed on fans and inside the evaporator in defrosting mode, preventing breakdowns and formation of «ice clouds».

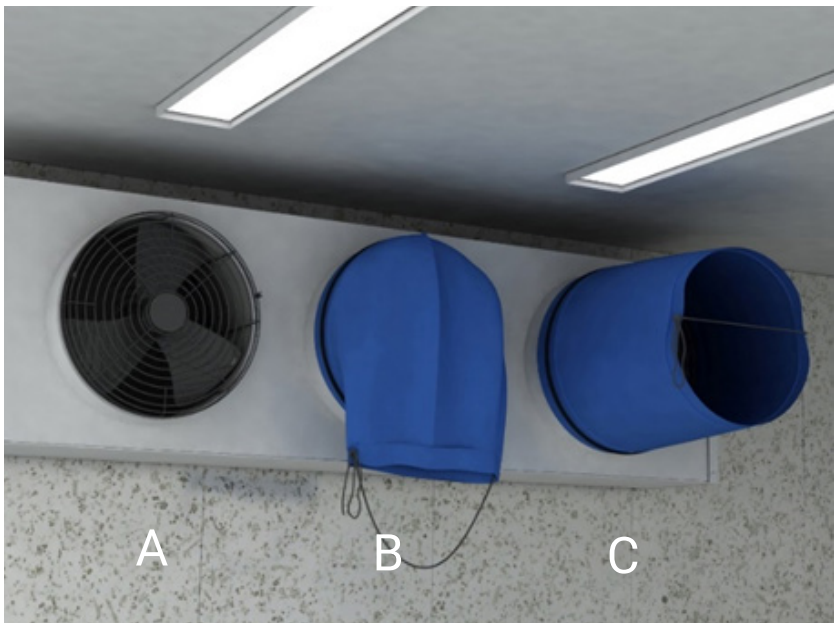

A. Evaporator fan
B. Fan with TEX-DEFROST in defrosting mode
C. Fan with TEX-DEFROST in active mode

AIR FLOW ADJUSTMENT

When the evaporator is in operation, the defroster gets inflated by the air with no losses of cold energy. A convenient adjustment system allows to increase the velocity or dissipate the air flow to evenly cool the room without increasing power and without purchasing additional cooling equipment.

Textile defrosters are made of durable lightweight fabric, tightly attach to the fan grill by special clamps to prevent damage or spontaneous disconnection.

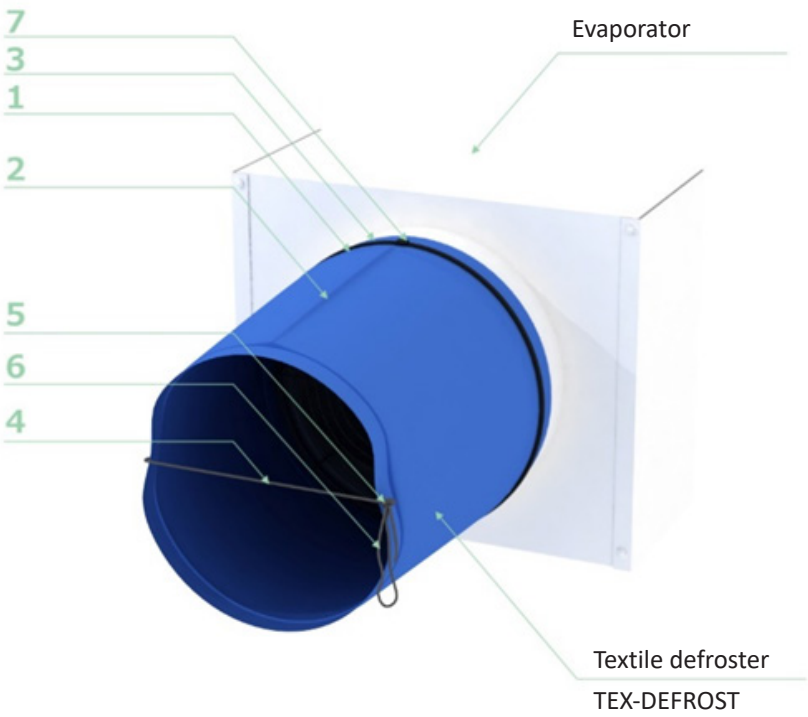

Device arrangement:

1. Connection
2. External seam
3. Clamp tape
4. Adjustment cable
5. Retainer
6. Adjustment loop
7. Clamp tape lock

TEXTILE NOZZLES WITH ADJUSTABLE AIRFLOW

Nozzles with adjustable airflow are a part of the high-velocity air distribution system and are used for ventilation and heating purposes.

The main application is rooms with high ceilings and distant from the main duct working zones, for example, sports facilities, shopping malls, production facilities and warehouses.

The key feature of the nozzle is the ability to form a directed compact air jet with a range of up to 30 meters.

When distributing the air through the nozzles, the admixture of the ambient air with the air supplied by the nozzle is minimized, and therefore this solution is especially effective for air heating.

Similarly, such system can be successfully used in multi-chamber air ducts, one part of which works for cooling and the other for heating or dehumidification.

Inside the textile nozzle there is a built-in air flow regulator with smooth adjustment feature of the air flow from 10% of the total air volume to 100%.

Characteristics:

- Diameter from 50 to 300 mm;
- Airflow: 100-1200 m^3/h;
- Adjustment damper.

Special Solutions

FABRIC AIR DUCT WITH MEMBRANE TEX-HEAT&COOL

If it is required to switch between the heating and cooling modes inside the room during the day, season or year, this was previously a problem, since traditional solutions only apply to a limited temperature range.

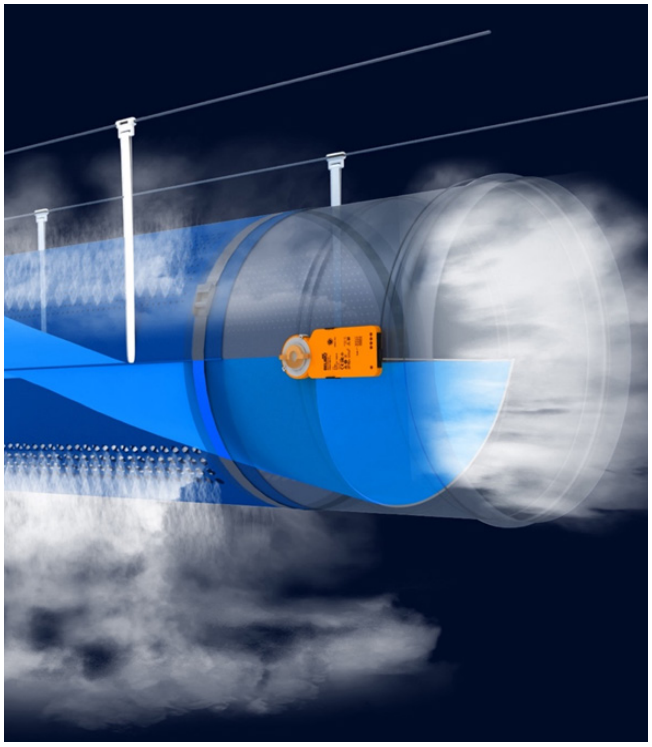

With standard air dispensing solutions, engineers average the values when delta T is less extreme, or by using expensive diffusers or nozzles that are controlled by even more expensive electronics.

TEXAIR solves this problem effectively by combining two different models of air distribution, pressure and airflow in one duct.

TEX-Heat & Cool is the perfect air distribution system, designed for optimal performance in both cooling and heating modes, regardless of the temperature range.

The complexity of the task lies in the fact that cold air descends and warm air rises, and therefore the perforation diameter required for comfortable supply of heated air to the working area leads to a too high rate of cooled air supply.

Such problems occur in parts of the world where there is a significant difference between summer and winter conditions. It is also important for industrial production, where, regardless of the season, it is necessary to cool production equipment as part of the working process.

The TEX-Heat&Cool solution offers two totally different air distribution models, one for heating and an opposite one for cooling. This allows our engineers to combine the optimal airflow for both heating and cooling purposes in one duct.

COOL MODE

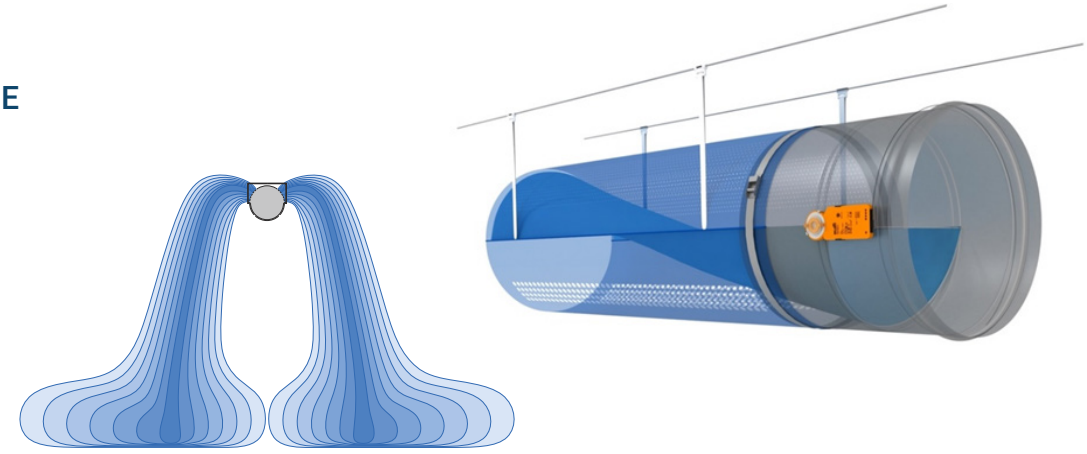

HEAT MODE

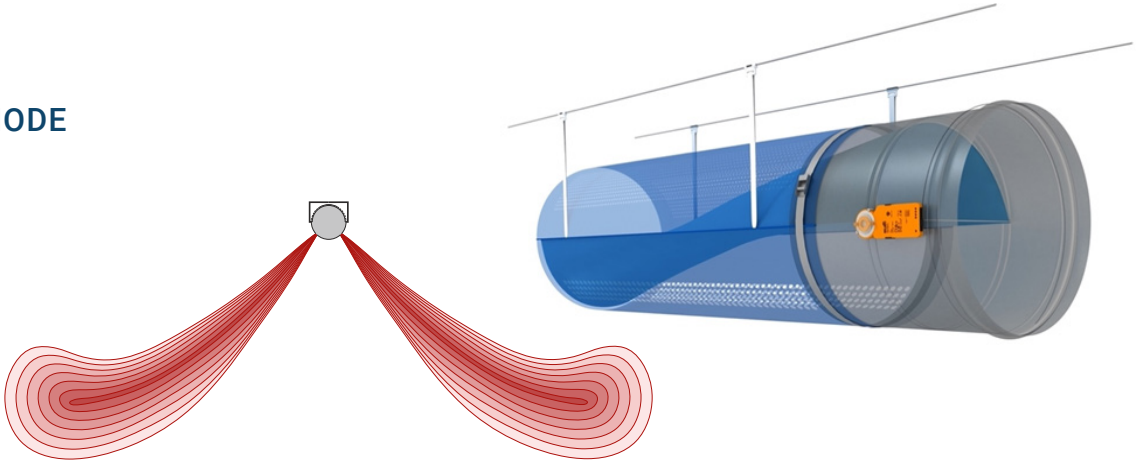

TEX-CEILING CEILING TEXTILE PERFORATED DIFFUSERS

TEX-CEILING ceiling textile perforated diffusers are an innovative product, the main purpose of which is the comfortable distribution of conditioned air in offices and public buildings with suspension ceilings.

There is no other product like this on our market. Its distinguishing feature is the distribution of air into four directions by way of diffusion. This helps avoid the so-called “cold shower” effect.

Also, an undoubted advantage is the ability to style ceiling diffusers in different color and pattern styles. These devices are very simple to install and are installed on a suspension ceiling along with standard ceiling panels. Ceiling textile diffusers can be a good replacement for a traditional ceiling solution. This solution will be interesting both for ventilation companies and end users.

TEX-CEILING ceiling textile perforated diffusers are manufactured out of fabric weighing 230 g/m^2.

Heat resistance: +110°C
Cold resistance: -30°C

The necessary air flow is supplied via a textile perforated diffuser. TEX-CEILING operates via calibrated perforation, which precisely regulates the volume of air supplied via the diffuser.

For cleaning, TEX-CEILING is subject to machine washing at a temperature of up to 40°C over the course of 15 minutes, then dried, and installed at the operation site.

The form of affixing a textile diffuser to a transit system is developed in a special way, which ensures the necessary air flow evenness. The foundation of the diffuser is made in such a way that, when necessary, it can be replaced with an alternative with lighting or of another color, as well as leaves.

The size of the TEX-CEILING textile ceiling diffuser is equal to 587x587 mm, which fully corresponds to the size of the standard suspension ceiling cell.

The diameter of the supplying air duct and the textile transit length up to affixture to the main system is calculated individually for the most precise possible connection of the systems. Thanks to calibrated perforation and textile leaves, the volume of the air emitted becomes fixed and the noise effect is minimized.

Example of air flow distribution via TEX-CEILING textile diffuser

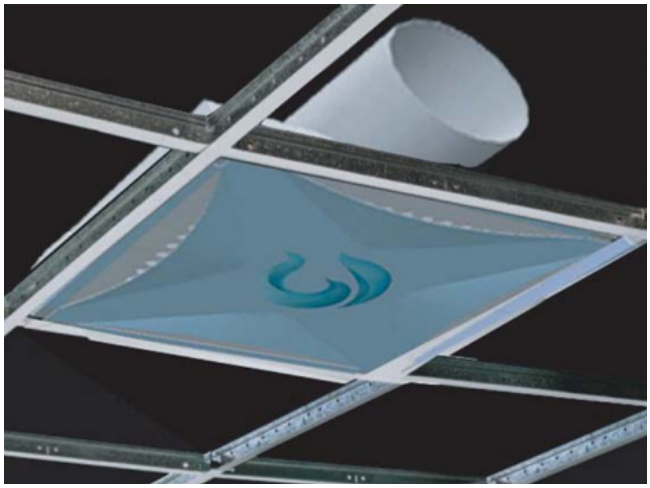

Diffuser into a standard suspension ceiling

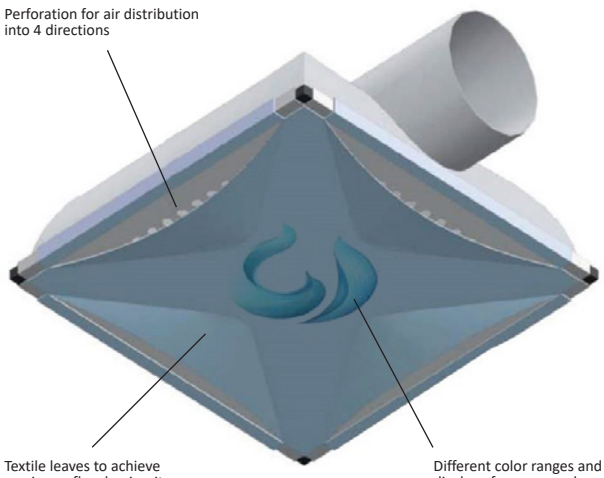

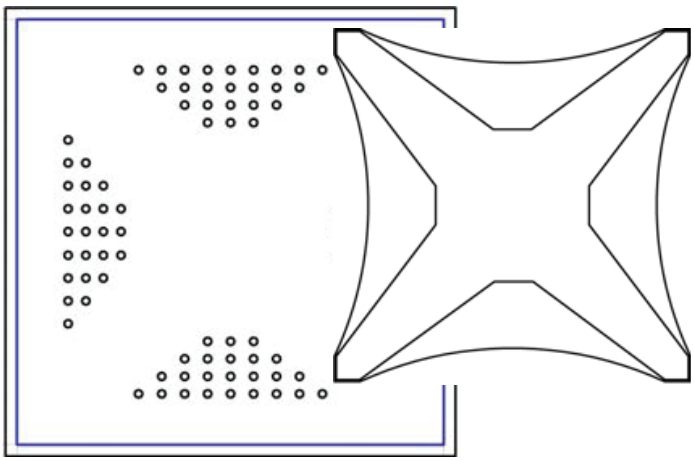

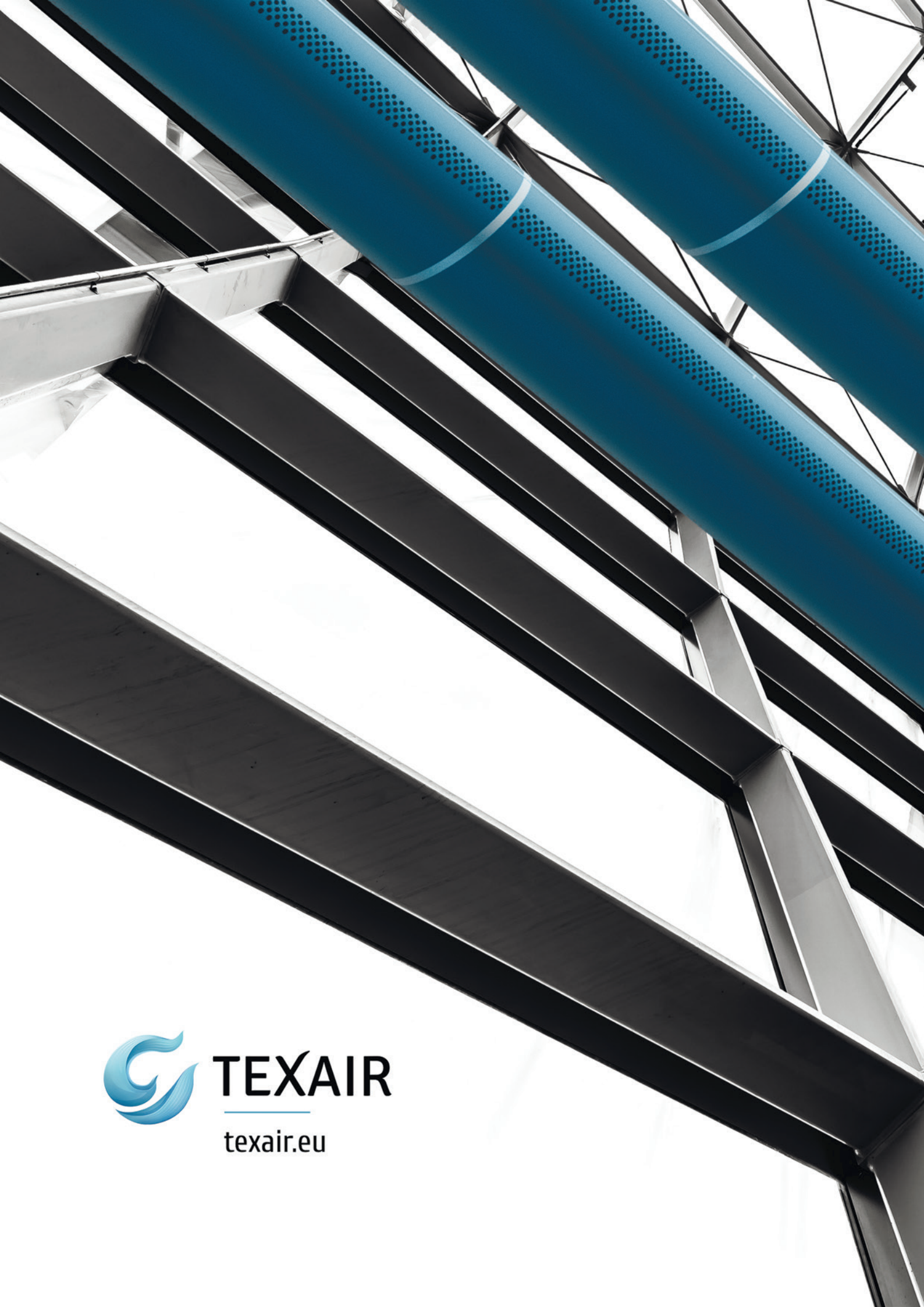

TEXAIR

texair.eu